BC bio cleaner

OPERATING INSTRUCTIONS

Waste Water Treatment Plant
BC BioCleaner for 4 – 50 PE

- **BASIC**
- **OPTIMA**
- **COMFORT**
- **EXCLUSIVE**

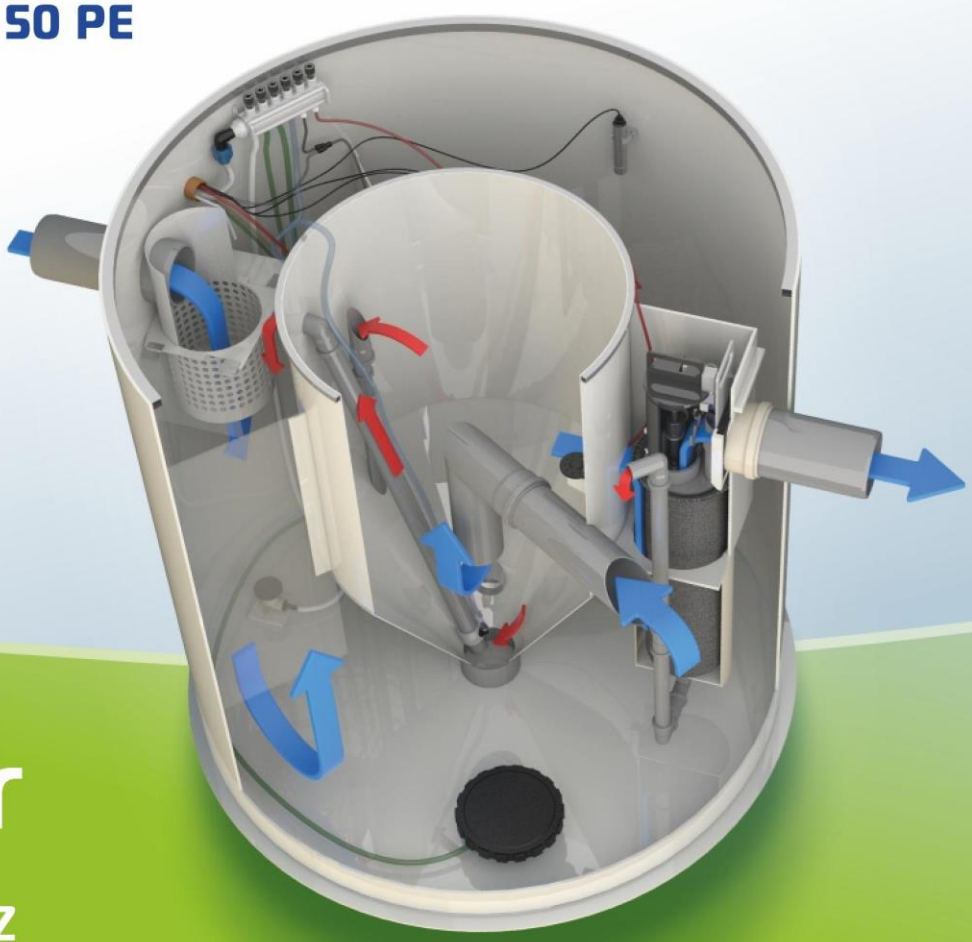

envi pur

www.envi-pur.cz

This manual contains important directions and safety warnings.
Please, read this manual carefully before using the WWTP.

CE WWTP BioCleaner® is certified according to EN 12566-3+A2

© ENVI-PUR, s.r.o. 2020, all rights reserved.

Operating Rules

Identification Data	
WWTP type:	
Locality:	
Investor/Owner:	
Keeper:	
Designer:	
Contractor of constructional part:	
Contractor of technological part/Supplier of WWTP:	
Person responsible for WWTP operation:	
Water law authority:	
Water law decision:	
The person appointed to perform technical revision:	

Dates and records	**Commencement**	**Termination**	**Working Rules approval**		
			Date	**Approved by**	**In effect by**
Trial run:					
Trial run - extended:					
Permanent operation:					
Permanent operation - extended:					

Values determined by the water law decision	BOD_5	COD_{Cr}	SS	$N\text{-}NH_4$			
permissible value for the analyses of "p" mixed samples (mg/l)							
maximum permissible value for the analyses of "m" common samples (mg/l)							
drained amount (t/year)							
permissible amount of the drained waters max. m^3/year							

Basic data on recipient:

Name	sewerage outlet point	distance from WWTP
other data:		

Important addresses and phone numbers					
Medical rescue service	Fire brigade	Police	Hygienic station		

1 TABLE OF CONTENTS

1 TABLE OF CONTENTS ... 2
2 DESIGNATION OF COMPLIANCE ON THE PRODUCT ... 4
3 INTRODUCTION ... 5
3.1 General ... 5
3.2 Graphical labelling of instructions ... 5
4 USING AND GENERAL DESCRIPTION OF WWTP ... 5
5 OPERATING CONDITIONS OF THE WWTP ... 6
6 SAFETY PRECAUTIONS ... 7
6.1 Requirements for the competence of persons (companies) ... 7
6.2 Principle of safe use ... 7
6.3 Stop and shutdown ... 7
6.4 Prevention against possible danger ... 7
6.4.1 General ... 7
6.4.2 Contact with sewage water ... 7
6.4.3 Falling into the tank ... 8
6.4.4 Handling the waste ... 8
6.4.5 Other dangers ... 8
7 VARIANTS AND SIZES OF THE WWTP ... 9
7.1 General ... 9
7.2 WWTP size ... 9
7.3 Static tank dimensioning ... 9
7.4 WWTP material ... 9
7.5 Operation comfort ... 9
7.6 WWTP equipment ... 10
8 IDENTIFICATION AND LABELLING ... 14
9 INSTALLATION AND PUTTING INTO OPERATION ... 15
9.1 Recommended setting of the air distribution for BC 4 – 12 WWTP ... 15
9.2 Recommended setting of the air distributor for BC 16 – 50 WWTP ... 16
9.3 The reference values of dissolved oxygen in individual zones (operating conditions) ... 16
10 BRIEF DESCRIPTION OF WWTP ... 17
10.1 General ... 17
10.1.1 Pumps - Air-lift pumps ... 17
10.2 Biological reactor Bio Cleaner® ... 17
10.3 Above-standard equipment options ... 18
10.4 WWTP function ... 20
11 WWTP BASIC ... 23
11.1 WWTP operation control ... 24
11.1.1 Timer (on/off) setting procedure ... 24
11.2 Air distribution ... 24
12 WWTP OPTIMA ... 25
12.1 WWTP operation control ... 25
12.1.1 Time Relay ... 25
12.1.2 Way of settings (ON/OFF) time relay [x)] ... 26
12.1.3 Control unit – OPTIMA [x)] ... 26
12.1.4 Setting the time intervals for phases C1 and C2 ... 27
12.1.5 Replacing the fuse ... 27
12.2 Air distribution ... 28
13 WWTP COMFORT ... 30
13.1 WWTP operation control ... 30
13.1.1 COMFORT PLUS Control Unit ... 30
13.2 Air distribution ... 31
14 WWTP EXCLUSIVE ... 33
14.1 Air distribution ... 34
14.2 WWTP operation control ... 35
14.2.1 COMFORT PLUS [x)] Control Unit ... 35
14.2.2 Control mode ... 36
14.2.3 Setting mode ... 36
15 WWTP EXCLUSIVE UV ... 42
15.1 UV radiation ... 42
15.2 Air distribution ... 43
15.3 WWTP operation control ... 44
16 WWTP DUO ... 45
16.1 Air distribution ... 46
16.2 WWTP operation controlL ... 47
17 CONTAINERIZED WWTP ... 48
17.1 WWTP Optima ... 48
17.1.1 WWTP Operation Control ... 48
17.1.2 Air distribution ... 49
17.2 WWTP Comfort ... 50
17.2.1 WWTP Operation Control ... 50
17.2.2 Air distribution ... 50

17.3 WWTP Exclusive/Exclusive UV ... 51
17.3.1 WWTP Operation Control ... 51
17.3.2 Air distribution ... 52
18 DOSING EQUIPMENT FOR CHEMICAL PRECIPITATION OF PHOSPHORUS ... 54
18.1 Description ... 54
18.2 Packaging, storing ... 54
18.2.1 Packaging ... 54
18.2.2 Storing ... 55
18.3 Location and installation of the dosing equipment ... 55
18.3.1 Location ... 55
18.3.2 Installation ... 56
18.4 Dosing ... 56
18.5 Operation and maintenance ... 57
18.5.1 Checking the amount of Flocculant PAX ... 57
18.5.2 Dosing pump operation ... 57
18.6 Occupational safety and health at work with coagulant ... 58
18.7 Minimum protective equipment for coagulant handling ... 58
19 STARTING-UP OF THE WWTP ... 58
20 OPERATION AND MAINTENANCE ... 60
20.1 GeneraL ... 60
20.2 Utilities/gadgets ... 60
20.3 Start-up and shut down of the WWTP ... 60
20.4 Summary of activities performed during operation and maintenance ... 60
20.5 Description of activities performed during operation and maintenance ... 61
20.5.1 Daily Inspection ... 61
20.5.2 Weekly inspection ... 61
20.5.3 pH measuring ... 63
20.5.4 Measuring the Sludge Concentration – SEDIMENTATION TEST ... 64
20.5.5 Pumping off the sludge ... 64
20.5.6 Sampling ... 65
20.6 Operation and maintenance of blower ... 66
20.6.1 Membrane blower SECOH [illegible] ... 66
20.6.2 Blower EFFEPIZETA ... 66
20.7 Mechanical filter operation and maintenance ... 67
20.7.1 Mechanical Filter Operation and Maintenance ... 67
20.7.2 Mechanical Tertiary Filter ... 67
20.8 UV lamp operation and maintenance ... 68
20.8.1 Daily Inspection ... 68
20.8.2 Weekly Inspection ... 68
20.8.3 Protective Tube Inspection and Cleaning ... 68
20.8.4 Replacement of UV Lamp ... 69
20.9 Operation in winter ... 71
20.10 Keeping the operation documents ... 71
21 FAILURES AND TROUBLESHOOTING ... 72
21.1 General ... 72
21.2 Functional failures ... 72
21.2.1 Secoh blower failure [illegible] ... 72
21.2.2 Effepizeta blower failure [illegible] ... 72
21.2.3 Indicated Faults – BCC CONTROL UNIT ... 72
21.2.4 Indicated failures – control unit COMFORT PLUS ... 72
21.2.5 Other failures ... 73
21.3 Technological failures ... 74
21.3.1 UV Lamp ... 77
22 INTERRUPTING AND STOPPING OPERATION ... 77
22.1 General ... 77
22.2 Short-term shutdown ... 77
22.3 Complete shutdown ... 77
23 OPTIONAL ACCESSORIES ... 78
23.1 Germicidal UV lamp ... 78
23.2 Oxygen sensor ... 78
23.3 Sediment trap for pumping sediment trap for pumping of excessive sludge ... 78
23.4 Pump sump ... 78
23.5 Foreseated PRIM sedimentation tank ... 79
23.6 Sludge dewatering equipment (SDE) ... 79
24 TECHNICAL SPECIFICATIONS ... 80
24.1 Hydrotechnical parameters ... 80
24.2 Volumes and weights ... 83
24.3 Noise emissions ... 85
24.4 Maximum capping height and maximum admissible pedestrian load ... 85
24.5 Electrical installation ... 86
24.6 Standards and regulations ... 87
24.6.1 Design Standards and Regulations ... 87

2 DESIGNATION OF COMPLIANCE ON THE PRODUCT

CE

ENVI-PUR, s.r.o. , Na Vlčovce 13/4, 160 00 Praha 6 - Dejvice
ID: 25166077

08

EN 12566-3

Biologically active sewage treatment plant

BIO CLEANER BC .. PP BASIC, BIO CLEANER BC .. PP OPTIMA, BIO CLEANER BC .. PP COMFORT, BIO CLEANER BC .. PP EXCLUSIVE - / UV

BIO CLEANER BC .. K PP BASIC, BIO CLEANER BC .. K PP OPTIMA, BIO CLEANER BC .. K PP COMFORT, BIO CLEANER BC .. K PP EXCLUSIVE - / UV

BIO CLEANER BC .. PE BASIC, BIO CLEANER BC .. PE OPTIMA, BIO CLEANER BC .. PE COMFORT, BIO CLEANER BC .. PE EXCLUSIVE - / UV

BIO CLEANER BC .. SL BASIC, BIO CLEANER BC .. SL OPTIMA, BIO CLEANER BC .. SL COMFORT, BIO CLEANER BC .. SL EXCLUSIVE - / UV

BIO CLEANER BC .. K SL BASIC, BIO CLEANER BC .. K SL OPTIMA, BIO CLEANER BC .. K SL COMFORT, BIO CLEANER BC .. K SL EXCLUSIVE - / UV

BIO CLEANER BC .. B BASIC, BIO CLEANER BC .. B OPTIMA, BIO CLEANER BC .. B COMFORT, BIO CLEANER BC .. B EXCLUSIVE - / UV

BIO CLEANER BC .. PP N BASIC, BIO CLEANER BC .. PP N OPTIMA, BIO CLEANER BC .. PP N COMFORT, BIO CLEANER BC .. PP N EXCLUSIVE - / UV

BIO CLEANER BC .. B N BASIC, BIO CLEANER BC .. B N OPTIMA, BIO CLEANER BC .. B N COMFORT, BIO CLEANER BC .. B N EXCLUSIVE - / UV

Rated daily flow rate (m^3/day):	0,6; 0,9; 1,2; 1,5; 1,8; 2,25; 2,4; 3,0; 3,75; 4,5; 5,25; 6,0; 6,75; 7,5 *
Rated organic daily load (kg of BSK_5/day)	0,24; 0,36; 0,48; 0,60; 0,72; 0,90; 0,96; 1,20; 1,50; 1,80; 2,10; 2,40; 2,70; 3,00 *
Material:	PP, PE, stainless steel, concrete *
Water tightness (water test):	it met the standard
Compressive strength (at the failure limit):	it met the calculation
Durability:	it met the standard
Fire resistence:	F
Impact of hazardous substances:	NPD

Cleaning efficiency during the test according to EN 12566-3 with the organic daily load of BSK5 = 0,208 kg/d and with 0,306 kg/d:

Index	values at the outlet (mg/l)	efficiency (%)
BOD_5	XX	XX
COD_{Cr}	XX	XX
SS	XX	XX
$N\text{-}NH_4^+$ **	XX	XX
N_{total}	XX	XX
P_{total}***	XX	XX
Enteroccoci	XX (KTJ/100ml)	XX
Escherichia coli	XX (KTJ/100ml)	XX
Fek. kolif. bakt.	XX (KTJ/100ml)	XX
Coliform bacteria	XX (KTJ/100ml)	XX
Somatic coliphage	XX (PTJ/ml)	XX

*…… depending on the WWTP size and variant
**…. at the mixed liquor temperatures above 12°C
***…. With P-Less (phosphorus precipitation equipment)
XX…. According to WWTP type , see chapter 23 Technical specification – parameters of cleaned water

MANUFACTURER:
ENVI-PUR, s.r.o., Na Vlčovce 13/4, 160 00 Prague 6 – Dejvice, Czech Republic
tel.: 381 203 211; fax: 381 251 739; e-mail: info@envi-pur.cz

SERVIS:
Authorized person (or authorized dealer) according to the list at www.envi-pur.cz

OR

ENVI-PUR, s.r.o., Wilsonova 420, Soběslav 392 01, Czech Republic
tel.: 381 203 211; fax: 381 251 739; e-mail: info@envi-pur.cz

3 INTRODUCTION

3.1 GENERAL

If you follow this service manual, it is guaranteed while using the WWTP the rules of safe use will be kept at the level corresponding the currently valid safety standards, rules and right technical procedures.

It is necessary to be familiarized with this service manual before you start using the WWTP. Do not carry out any activities before you have become familiar with this service manual thoroughly and have understood all the instructions listed in it.

3.2 GRAPHICAL LABELLING OF INSTRUCTIONS

Very important instructions and warnings are highlighted in this service manual in the following way:

	Instructions, infringement of which might cause endangering people or belongings.
	Prohibited activities.
	Other important instructions.

4 USING AND GENERAL DESCRIPTION OF WWTP

The WWTP of type BIO CLEANER®is a biological WWTP that works the principle of low-loaded activation with complete stabilization of the sludge. Activation is organized like so called D-N process, it means denitrification-nitrification activated sludge process. The process of treatment proceeds in one tank – biological reactor BIO CLEANER®, which is divided to several zones with different technological parameters of operation.
Tank of WWTP – biological reactor BIO CLEANER® is formed by plastic (eventually stainless steel or concrete) container, which is intended to be installed into the terrain. Technological built-in unit can be also placed into the concrete tank of relevant dimensions by custom special order. The blower is the basic equipment for air supply, mixing of mixed liquor and pumping of return sludge. Forced pumping of return sludge and floating impurities from the secondary settling tank is ensured with the aid of so called hydraulic - pneumatic pumps (air-lift pumps).
A part of WWTP is also electric switchboard (depending on the stage of equipment comfort - WWTP variant) and air blower, these components are installed close of tank, for example to the cellar, garage, pillar etc.
Special equipment – dosing pump for phosphorus precipitation, oxy probe, tertiary filter or UV disinfection on the outletl, pumping pit, septic tank, sludge holder,...

5 OPERATING CONDITIONS OF THE WWTP

The WWTP is designed to clean sewage water as properly as are the expectations about the amount of the water and its quality. This is in accordance with the project documentation based on the size and type of the connected area.

For the proper function of the WWTP it's necessary to keep it on permanently.

In order to keep working biological procedures during the cleaning it's necessary not to supply it with substances which will destroy living microorganisms.

It's NOT allowed to supply the sewage connected to the WWTP or the tank itself with:

- **High concentration of grease,**
- **regenerative lotion from softeners,**
- **backwash from house filters (e.g. water softeners, iron water filter etc.),**
- **paints, varnish and diluents,**
- **strong disinfectants, acids, alkali,**
- **waste water from condensing boiler (low pH),**
- **rain water,**
- **waste from the kitchen garbage disposer.**

The quality of the cleaning is negatively influenced by detergents and tensides. We recommend avoiding doing laundry too frequently (many times a weekend). The pH will grow up and amounts of the oxygen in the water will be lower which is leading to the growing number of micro-organisms. Rather do your laundry within a few days.
We strongly recommend using disinfection solutions which do NOT contain chlorine compounds!
However usually used amount of detergents (during normal operation of household) should not affect the operation of WWTP.

The input to the WWTP is mechanically filtered from larger contamination of water which has to be disposed periodically (in worse case can occur at blockage of drainage). For lowering the interval of cleaning the filters we recommend to **avoid** supplying the sewage with:

- Plastics,
- rubber,
- textile,
- remainders of food,
- toiletries (sanitary towels, tampons),
- condoms,
- nappies,
- dampened towels, handkerchiefs, etc.

6 SAFETY PRECAUTIONS

6.1 REQUIREMENTS FOR THE COMPETENCE OF PERSONS (COMPANIES)

To assure people's safety and failure-free running, activities connected with the operating, maintenance and service of the WWTP, must only be carried out by people (firms) with corresponding ability.

Operation and maintenance of the WWTP described in this service manual, can only be carried out by people over
18 years of age and who are physically and mentally able to practice/perform the activities described and are familiar with this service manual.
Service of the WWTP can be only done by the firm ENVI-PUR, s.r.o. or any other authorized person or company (further only authorized dealer) and trained by ENVI-PUR.

People with corresponding electrotechnic qualification can only carry out any intervention into the electrical parts of the WWTP.

Children and pregnant (breastfeeding) women must not operate or maintain the WWTP.

6.2 PRINCIPLE OF SAFE USE

- **Become familiar with this service manual before using the WWTP thoroughly.**
- **In connection with the use of the WWTP do not do any activities which do not come from this service manual.**
- **Keep precautions about protection against the dangers described in this service manual thoroughly, especially in chapter 6.4.**
- **Always use prescribed personal protective gadgets/devices.**

6.3 STOP AND SHUTDOWN

To avoid possible danger and in case of need, it is possible to turn off the WWTP:

- Switching off the circuit breaker in the electrical box or by disconnection from the power socket (depending on the WWTP type).

6.4 PREVENTION AGAINST POSSIBLE DANGER

6.4.1 General

Although the WWTP has been designed in accordance with current valid safety standards, rules and right technical procedures, during its construction it was not possible to exclude the further described dangers, which result from its character and the purpose of the use.

6.4.2 Contact with sewage water

Sewage water in the WWTP, sludge, rakings, used working gadgets/devices and clothing may be the source of different infections. While operating and maintaining the WWTP try to avoid direct contact with water, sludge and rakings and observe general sanitary principles.

- **While working pay strict attention, do not eat, drink or smoke.**
- **Use adequate working clothes and elastic gloves.**
- **Wash thoroughly with water the tools and gadgets/devices which have been in contact with sewage water, sludge or rakings.**
- **Used working clothes, gloves, tools and gadgets/devices are to be stored in an appropriate place.**
- **After work, wash your hands thoroughly at least with soap and hot water.**

6.4.3 Falling into the tank

After opening (removing) the cover it is possible to fall into the tank.

- **While working be very careful.**
- **Do not leave the open tank of the WWTP unsupervised and unattended.**
- **Do not enter the area of the tank (the WWTP is designed so that it is possible for all common activities to be carried out from the outer space without the need of entering).**

In case of exceptional events, when it is necessary to enter the tank, follow all generally valid safety principles and rules for entering underground premises.

- **Inner parts of the tank are not designed as surfaces or components to walk on.**
- **In the case of installing the reservoir into a major depth, it is necessary to deal with entering the reservoir within the project in accordance with appropriate safety rules.**

6.4.4 Handling the waste

While running the WWTP, waste (sludge) increases, which is necessary to liquidate separately in an appropriate way.
Screenings are manually collected in dumpster and disposed of in landfills with other municipal waste.
Excess sludge is possible to drain with the aid of gulley sucker and assure liquidation at bigger WWTP with sludge ending.
Drained excess sludge must not be stored so that a quality of ground and surface waters is influenced.

Owner of WWTP is responsible for waste disposal.

Sludge and water pumped of the WWTP is dangerous waste and handling must be done in accordance with legal rules.

6.4.5 Other dangers

Other dangers and protection against them are highlighted, in the appropriate parts of this service manual.

7 VARIANTS AND SIZES OF THE WWTP

7.1 GENERAL

This manual is made for the whole type series of WWTPs - BASIC, OPTIMA, COMFORT - that different in:

- The size in terms of the possible flow rate of sewage water and related construction of a tank,
- the variant in terms of the static tank dimensioning,
- the variant in terms of the material design of the tank,
- the variant according to comfort of operation,
- WWTP equipment.

You need to know the exact type and size of the WWTP you are operating for easy use of this manual. This data is to be found in the certificate of warranty which is included in the service book.

Due to the diverse of series of WWTP, all pictures in this manual don´t have to correspond with your operated WWTP.

The products marked with this sign ¤) can be replaced by similar type or by comparable product from another producer.

7.2 WWTP SIZE

The size of a WWTP is defined by the number next to the BC mark (4, 6, 8, 10, 12, 16, 20, 25, 30, 40, 50), which defines the equivalent number of people (PE) in the connected area. WWTPs of size 4, 6, 8, 10 and 12 have a cylindrical tank; WWTPs of size 16, 20, 25, 30, 40, 50 have a cylindrical or squared tank. The location of WWTP parts is based on the shape of a tank.
The WWTP is able to work at loading of 50 – 130 %.

7.3 STATIC TANK DIMENSIONING

When in the basic design without further designation the WWTP tank is intended for installation under the terrain level under the defined conditions without any further static security. The WWTP tank marked "N“ (e.g. BC 6 PP BASIC N) must be secured against anticipated load by convenient building conversions (e.g. concrete encasement).

7.4 WWTP MATERIAL

"PP“ stands for the polypropylene design, "PE“ the polyethylene design, "SL“ the stainless steel design, and "B“ the concrete design.

7.5 OPERATION COMFORT

The type and construction

Type according too operation comfort and the related structural modifications defines the designation number behind the nominal size number The WWTP is produced in basic types:.

BASIC – econimical solution (BC 4 and BC 6 only)
OPTIMA – with more comfortable control unit OPTIMA (for BC 4 - 50) manual startup of surface cleaning of sedimentation zone (for BC 4 - 50)
COMFORT, EXCLUSIVE a EXCLUSIVE UV – with comfortable control unit COMFORT Plus and automatic surface cleaning of sedimentation zone (for BC 4 - 50), optional remote management

7.6 WWTP EQUIPMENT

BC BASIC

Control unit:

- Analog timer (230 V, 15 min interval available) ¤)

Tank design:
Cylindrical

- BC 4 PP N BASIC, BC 6 PP N BASIC - PP 6 mm tak (concreeting suggested)
- BC 4 PP BASIC, BC 6 PP BASIC – PP 8 mm tank (self-supporting)
- BC 4 B BASIC, BC 6 B BASIC – concrete tank

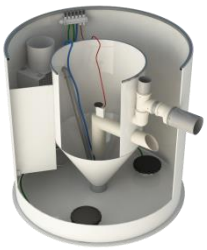

BC OPTIMA

Control unit:

- **Optima**¤) (for BC 4 – BC 50 with blower Secoh¤) JDK 60 – JDK 300 / 240V) – WWTP operatoin (start / stop of blower) with 10 interval programs for blower running

- **Electro switchboard with switch relay**¤) (for BC 50 wit blower FPZ R 20 MD – FPZ R 40 MD / 400 V) ¤)

Tank design:

Cylindrical:

- BC 4 PP OPTIMA - BC 50 PP OPTIMA - PP 8 mm tank (self-supporting)
-
- BC 4 B OPTIMA až BC 20 B OPTIMA – concrete tank

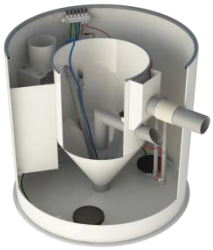

Container:

- BC 16 PP OPTIMA K - BC 50 PP OPTIMA K – PP container
- BC 16 B OPTIMA K - BC 50 B OPTIMA K – concrete container

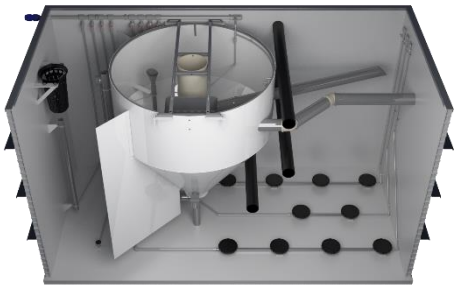

BC COMFORT

Electro switchboard with control unit COMFORT Plus ¤)

- 13 programable regimes – WWTP operation (start / stop of blower) by control unit with 13 preset programs of blower running
- Next optional regimes – veekend, holiday,…
- Remote managemet via mobile phone or internet
- Other equipment connection possible (phosphorus precipitation, oxyprobe, ..)

Tank design:

Cylindrical:

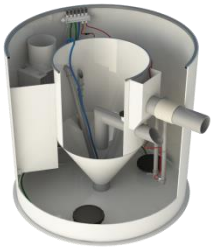

- BC 4 PP COMFORT - BC 50 PP COMFORT - PP 8 mm tank (self-supporting)
- BC 4 B COMFORT - BC 20 B COMFORT – concrete tank

Container:

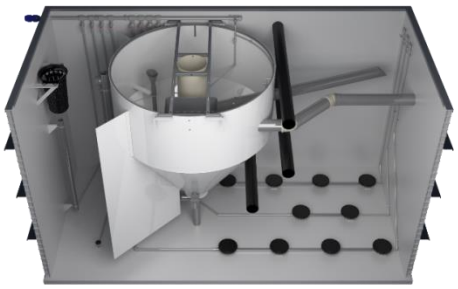

- BC 16 PP COMFORT K - BC 50 PP COMFORT K – PP 8mm container
- BC 16 B COMFORT K - BC 50 B COMFORT K – concrete container

BC EXCLUSIVE

Electro switchboard with control unit COMFORT Plus ¤)

- 13 programable regimes – WWTP operation (start / stop of blower) by control unit with 13 preset programs of blower running
- Next optional regimes – veekend, holiday,…
- Remote managemet via mobile phone or internet
- Other equipment connection possible (phosphorus precipitation, oxyprobe,...)

Tertiary filtr on outlet ¤) – capturing of impurities bigger than 0.5 mm

Tank design:

Cylindrical:

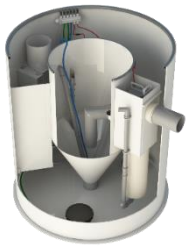

- BC 4 PP EXCLUSIVE - BC 50 PP EXCLUSIVE - PP 8 mm tank (self-supporting)
- BC 4 B EXCLUSIVE - BC 20 B EXCLUSIVE - concrete tank

Container:

- BC 16 PP EXCLUSIVE K - BC 50 PP EXCLUSIVE K – PP container
- BC 16 B EXCLUSIVE K - BC 50 B EXCLUSIVE K – concrete container

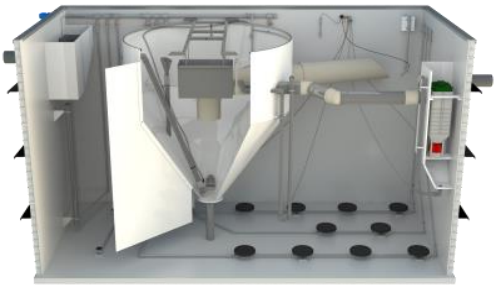

BC EXCLUSIVE UV

Electro switchboard with control unit COMFORT Plus ¤)

- 13 programable regimes – WWTP operation (start/stop of blower) by control unit with 13 preset programs of blower running
- Next optional regimes – veekend, holiday,…
- Remote managemet via mobile phone or internet
- Other equipment connection possible (phosphorus precipitation, oxyprobe,...)

Tertiary filtr on outlet ¤) – capturing of impurities bigger than 0,5mm

UV disinfection – bacteria and viruses removal

Tank design:

Cylindrical:

- BC 4 PP EXCLUSIVE UV - BC 50 PP EXCLUSIVE UV - PP 8 mm tank (self-supporting)
- BC 4 B EXCLUSIVE UV - BC 20 B EXCLUSIVE UV - concrete tank

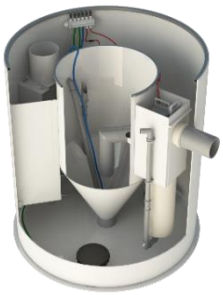

Container:

- BC 16 PP EXCLUSIVE UV K - BC 50 PP EXCLUSIVE UV K – PP 8 mm container
- BC 16 B EXCLUSIVE UV K - BC 50 B EXCLUSIVE UV K – concrete container

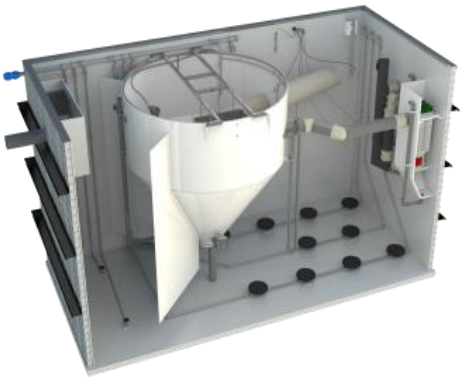

WWTP equipment :

WWTP type	**BASIC**	**OPTIMA**	**COMFORT**	**EXCLUSIVE**	**EXCLUSIVE UV**
Tank designed for concrete encasement (PP 6 mm)	●				
Self-supporting tank (PP 8 mm)	◘	●	●	●	●
Concrete tank	◘	◘	◘	◘	◘
BC DUO – two tanks solution	◘	◘	◘	◘	◘
Automatic surface cleaning of sedimentation tank	-	●**	●	●	●
Water lowering in sedimentation zone	-	-	●	●	●
Tertiary filter	-	-	-	●	●
UV disinfection	○ external	○ external	○ external	○ internal	●
Phosphorus precipitation (P-LESS)	○	○	○	●	●
Aerators replacaeble in operation	-	-	-	●	●
Oxygen / pH probe	-	-	○	○	○
Connection ising GSM (remote management)	-	-	○	○	○
Control via Internet	-	-	○	○	○
● standard equipment, ○ possible to order additionally, ◘ optional for new WWTP ** - manual start					
Discharge into surface water	yes	yes	yes	yes	yes
Discharge into groundwater (drain)	*yes	*yes	*yes	yes	yes
*with P-Less					

8 IDENTIFICATION AND LABELLING

The WWTP is provided with a production label placed inside the tank on the dip/diving wall at the outlet.

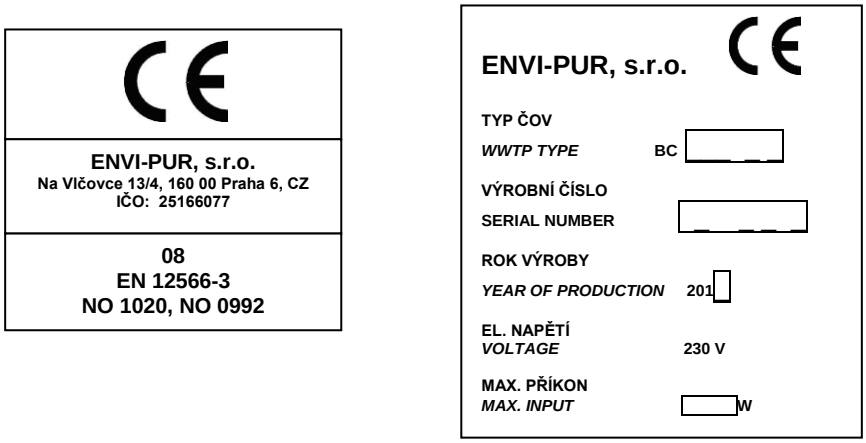

Fig. 1: Production labels

For each WWTP is issued a original Declaration of properties. This declaration has the same seriál number also contains specific data that indicate design and type of WWTP according to following key.

The entire marking (nomenclature) includes the following:
BC „ volume“ „tank shape“ „tank material“ „tank self-supporting“ „model“ „P-LESS“ „DUO“

Explanation of identifiers:

„volume“	4, 6, 8,...
„tank shape“	K – rectangular container, without marking – cylindrical tank
„tank material“	PP (polyprophylen), PE, SL(steinless steel), B (concrete)
„tank self-supporting“	N – non self-supporting tank, without marking – self-supporting tank
„model“	BASIC, OPTIMA, COMFORT, EXCLUSIVE, EXCLUSIVE UV
„P-LESS“	phosphorus precipitation, without marking – WWTP withou phosphorus precipitation
„DUO“	2 tanks WWTP (with primary sedimentation tank), without marking - 1 tank WWTP (withhout primary sedimentation tank)

9 INSTALLATION AND PUTTING INTO OPERATION

An authorized dealer has carried out installation and putting the WWTP into operation. Installation has been carried out in accordance with the project documentation completed by a competent person on the basis of papers of the firm ENVI-PUR, s. r. o. **After installation and set up the authorized dealer trained the staff and handed the WWTP to the operator.**

After installation the tank is filled with clean water and regulation of air valves is carried out on air distributor, see Chapter 9.1 and 9.2.

WWTP processing possibilities are given in Chapter 19.

At the handover of the WWTP, you have been given the following documentation:

- This service manual,
- Service book (contains warranty certificate, water-proof tank protocol, report on the inspection of electric apparatus/equipment),
- Book of service and maintenance of the blower,
- Wiring diagram,
- The feeder pump operation and maintenance manual, if supplied,
- Operation and maintenance manual for excternal UV disinfection (if it is part of delivery).

The operation manual can be used as the WWTP Working Rules once specific data that pertain to the installed WWTP are completed (see page 1) and once approved by the competent Water Authority.

Do not run the WWTP unless it has been handed over by the authorized dealers.

Please, check if:

- **The type and serial number matches the date on the certificate of warranty,**
- **the type of WWTP matches the type of WWTP in the project documentation,**
- **you were given all the documentation stated above.**

In case of discrepancy, please contact ENVI-PUR, s. r. o.

9.1 RECOMMENDED SETTING OF THE AIR DISTRIBUTION FOR BC 4 – 12 WWTP

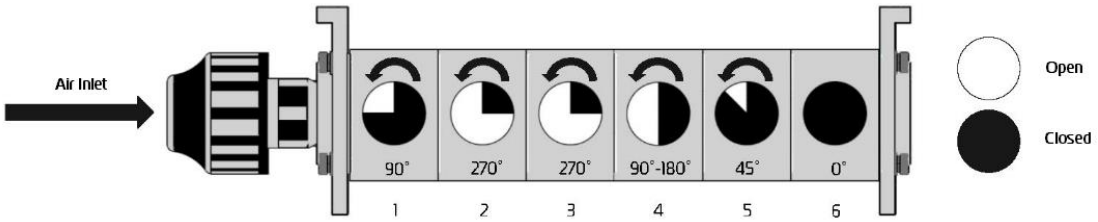

Fig. 2: Setting of the air distributor

Setting

When in the initial position, all valves are closed. The air flow is adjusted by turning the valves anticlockwise. The sector marked in white illustrates rotation of the vales in relation to the original position (open status).

Set individual valves by turning them anticlockwise by the values specified in the picture. The given switchboard picture is for reference only and it is vital to conform to the air distribution connection diagram to individual WWTP types.

Explanatory notes

1. The rough-bubble aeration element under the trash-rack basket – it assures mixing of the return sludge with waste water and aeration of the basket of the rough mechanical impurities.
2. The fine-bubble aeration element ensures mixing of the mixed liquor in the nitrification zone. It can be opened by 360° as maximum.
3. Air-lift pump of the return sludge – it assures sludge pumping from the secondary settling tank back into the denitrification zone.
4. Aeration of the secondary settling tank.
5. The air lift pump for manual blow-down of the tertiary filter (if installed in WWTP).
6. The manual aeration of the secondary settling tank (if installed in WWTP).

Remark: The adjustment in the picture cannot be considered absolute, it may differ in each WWTP installation. The valve is in the closed position if it lets in the zero amount of air, however, the air must pass through if the valve is turned from this position in anticlockwise direction by 5°.

Set the return sludge's air lift pump to such am output that the recirculated mixed liquor flows evenly out from the pipe and the stream is preventing from being splashed onto the basket. The amount of air under the basket/screens should be enough for the water in the basket/under the screen bubbles finely. Leave the air into aeration elements open fully. Depending on a specific WWTP application and its loading, set the appropriate level of aeration.

A small air leak from the air system does not affect the functionality of the WWTP.

9.2 RECOMMENDED SETTING OF THE AIR DISTRIBUTOR FOR BC 16 – 50 WWTP

1. The rough-bubble aerator under the inlet basket must be set for mild bubbling.
2. The fine-bubble aerator/grill in the nitrification zone - open the valve fully. Valve must be throttled if the foam is forming.
3. Adjust the rough-bubble aerator in the sedimentation zone so that the surface layer of floating impurities is broken. Mild bubbling is recommended, there is no need for bubbling in the sedimentation zone sometimes.
4. The air lift pumps of return sludge - set the uniform stream, water must not be splashing.

9.3 THE REFERENCE VALUES OF DISSOLVED OXYGEN IN INDIVIDUAL ZONES (OPERATING CONDITIONS)

Measuring with the oxygen sensor:

Denitirification zone	0.5 – 1 mg/l
Activation/nitrification zone	1 – 2.5 mg/l
Sedimentation zone	1 mg/l

10 BRIEF DESCRIPTION OF WWTP

10.1 GENERAL

This chapter gives a brief description of the WWTP, which is necessary to be familiar with the machine before the operation and maintenance.

The basic parts of the WWTP are:

- **Reactor Bio Cleaner®** is cylindrical or square tank with technological barriers, installations and figs, where the treatment of the sewage water takes place. The basin is situated under ground level, above ground level it is covered with wooden or plastic cover. The Basin is manufactured from polypropylene (BC…PP), stainless steel (BC…SL) or from concrete (BC…B) or polyethylene (BC…PE). Under the special conditions the Bio Cleaner® reactor can be alternatively installed only as a technological installation into the concrete tank or concrete receiver (e.g. into the original septic trap).
- **Blower** serving as the source of air for the WWTP; placed inside a building (e.g. a garage, cellar, pillar, etc.) or technical house.
- **Control unit, Electrical electro-switchboard** is serving to control the WWTP operation; placed inside a building (e.g. a garage, cellar, pillar, etc.) or technical house.
- **Air supply** into the biological reactor Bio Cleaner® made by means of a PVC hose and PP tubes placed in a protector below ground level.

10.1.1 Pumps - Air-lift pumps

In case of need, inside the reactor Bio Cleaner®, the hydro-pneumatic pump (so called air-lift pump, mammoth) starts pumping. The Air-lift pump is an arrangement, which makes the use of the density difference of its own liquid and mixture of liquid and air for pumping. The function of the air-lift pump is shown in the Figure 3.

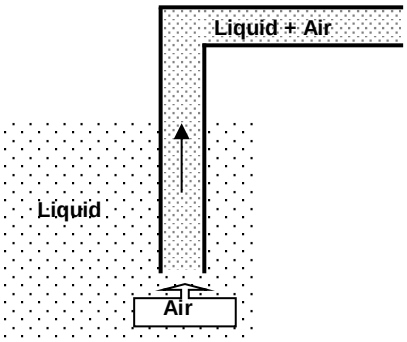

Fig. 3: Function of air-lift pumps

10.2 BIOLOGICAL REACTOR BIO CLEANER®

Biological reactor is designed as plastic (or stainless steel, or concrete) tank, plastic built-in is placed inside. All metal parts of construction are made from stainless steel.

Installation in the tank creates 3 hydraulic-separated zones:

- **Inlet zone (denitrification zone),**
- **activation zone (nitrification zone),**
- **secondary settling area (secondary settling zone).**

Waste waters are transported into WWTP through sewerage. Removable screens basket (hereinafter the basket) with holes of approximate diameter of 16 mm is placed under the sewerage inlet pipe. Aeration element is located under the basket to facilitate removal of the trapped organic impurities. The amount of air under the basket is regulated manually using the separate valve. The amount of air should be only as large as to assure sufficient breaking of the trapped impurities (e.g. a toilet paper). It is inconvenient to let excessive amount of air under the basket because there will not be enough air for the next air system elements!

Denitrification zone

Inlet zone serves for biological removal of nitrogen pollution from waste water in the absent of atmospheric oxygen. Waste water, return sludge and floating impurities (pumped by air-lift pump) are transferred from the secondary settling zone come into the tank area. By means of coarse-bubble diffuser is ensured mixing of return sludge with waste water, which serves for aeration of screen basket as well. Intensity of mixing is controlled by control valve.

One tubular element ensures aeration of basket from size BC 16 PE and other 1 – 2 coarse bubble diffusers ensure a mixing of denitrification zone. Amount of air should be such that geysers did not form on water level when mixing.

Nitrification zone
Nitrification zone occupies part of biological reactor between walls of tank, denitrification and secondary settling zone. Here, the mixing of mixed liquor is provided by the air driven into the fine-bubble aeration elements. Individual air supplies to the elements must be always fully open.

Sedimentation zone
Sedimentation tank is made of a plastic as the cone widened towards the water level to be terminated with cylindrical part. In the sedimentation tank, activated sludge is being separated (desedimented) from the treated water. The sedimentation tank's level is rippled using the coarse-bubble aerator to prevent forming of a crust of the floating impurities.

In the BASIC variant, treated water flows in freely under the level of the outlet pipe.

In the other versions, the treated water outlet is regulated by the down flow baffle on the outlet pipe. Floating barrage to trap the floating impurities is placed upstream of the outlet pipe.

The WWTP's of the EXCLUSIVE/EXCLUSIVE UV type have a tertiary filter mounted to the outlet to trap impurities in the treated water.

Each WWTP is equipped with the air lift pump for return sludge that repumps part of the settled sludge from the secondary settling tank back into the inlet zone. This air lift pump must be always operational if the blower is in operation!

Aside from the BASIC WWTP variant, a pipe with air lift pump is installed in the secondary settling tank for withdrawal of impurities, if any, from the water level. In the OPTIMA version, the air lift pump is started manually only while skimming in the other WWTP versions is automatic and these other WWTP versions are extra equipped with the air lift pump for periodic lowering of the service water level.

Aeration and mixing equipment, air lift pump
The aeration system of the fine-bubble aeration is used to assure the supply of oxygen into the biological treatment process and maintain the mixed liquor in the uptake. Blower is used as the source of air. The aeration system is formed by several fine-bubble disc-type aeration elements, 1 - 2 pcs of the coarse-bubble elements and, if necessary, one pipe element - depending on the WWTP type.
The air lift pump is used to pump the settled sludge from the secondary settling zone back to the denitrification zone and to pump off the floating impurities.
The air supply to WWTP for the aeration system and the air lift pump is regulated by the valves placed on the air distributor.

10.3 ABOVE-STANDARD EQUIPMENT OPTIONS

- ***Phosphorus Precipitation (Option)***

The excessive phosphorus, that can no longer be removed biologically, is precipitated chemically by dosing the aluminium salts in a form of the commercially available solutions. The dosing system is delivered as a unit - feeding pump, canister, and interception vat. This entire unit is installed together with blower into the area of garage, cellar, pier or technical house. Feeding pump should not be situated more than 10 m from WWTP.
Detail description is given in Chapter 18.

- ***Tertiary Final Treatment - Mechanical Filter (Accessory of EXCLUSIVE and EXCLUSIVE UV Variant)***

Mechanical filter, that assures catchment of possible impurities escaped from the secondary settling tank, can be installed on the outlet from WWTP. The filter is fitted in separate tank on the outlet pipe. Impurities caught on the filter or settled in the tank are pumped off automatically by the air lift pump back to the aeration system.
We recommend checking the filter once a month and, if necessary, rinse the filter manually in a bucket with water or using the stream of clean water from a hose.
Detail description is given in Chapter 20.7.2.

- ***UV Disinfection***

The EXCLUSIVE type WWTP can be additionally extended by the UV disinfection lamp that is installed into the mechanical filter structure or behind the mechanical filter (it depends on the size of WWTP)

External UV disinfection the UV Maxi or UV Maxi In version can be bought for the other types of WWTP.

UV Maxi - it consists of the tank, UV tank installation, UV tank attachement, power switchboard, D 910 mm cover with locking, UV lamp, stainless handle of the installation, and disconnection connector.

UV Maxi In consists of a spillway reactor located under the terrain level in immediate vicinity of WWTP. The equipment is composed of the power switchboard installed close to the tank, e.g. into the cellar, garage, pier, technical house, etc., being connected with the reactor via underground cable.

- ***Oxygen/pH Sensor***

Oxygen sensor is used to control the blower operation depending on the actual need for oxygen in the nitrification zone. This results in a reduction of blower operation related costs as compared to the control by time intervals as well as in achievement of the optimum conditions of the activation process.

It is convenient to install the pH sensor into WWTP where no inlet of the standard waste waters is present – e.g. the inlet of industrial waste waters. The pH sensor can be used to monitor the water quality and, if necessary, optimize the pH value in the activation process. The pH values outside of the optimum area of 6-8 inhibit the waste water treatment processes.

- ***Optional Connection Using GSM (Remote Administration)***

The waste water treatment plant equipped with the COMFORT Plus control unit with GSM can be controlled using the command SMS messages sent from a mobile phone. In fault condition, WWTP can simultaneously sent notification in a form of SMS message to the selected mobile number.

- ***Optional Monitoring of Operation, Faults, and Control via Server***

For the WWTP equipped with the COMFORT Plus control unit with GSM, the WWTP control system can be put into operation via the web interface through the GSM data transfer.

- ***Foreseated Septic Tank – DUO***

The primary sedimentation tank - septic tank - is installed upstream of the actual WWTP tank. The waste waters supplied by sewerage flow firstly into the septic tank. This tank is used as a primary sedimentation of coarse impurities that drop to the tank bottom. The water deprived of coarse impurities flows through a gravity overflow into the biologic reactor.
An excessive sludge from WWTP can be pumped into the septic tank.

- ***Aerators Exchangeable in Operation***

The BC 4-10 WWTP's can be equipped with the system of the aerators exchangeable during operation. It is the standard equipment of the BC 4-10 EXCLUSIVE and EXCLUSIVE UV type WWTP's. Aerators should be replaced by the authorized personnel.

10.4 WWTP FUNCTION

Water waters are treated in the BIO CLEANER® reactor divided by baffles and installations into separate functional zones according to the diagram below:

Variant BASIC and OPTIMA

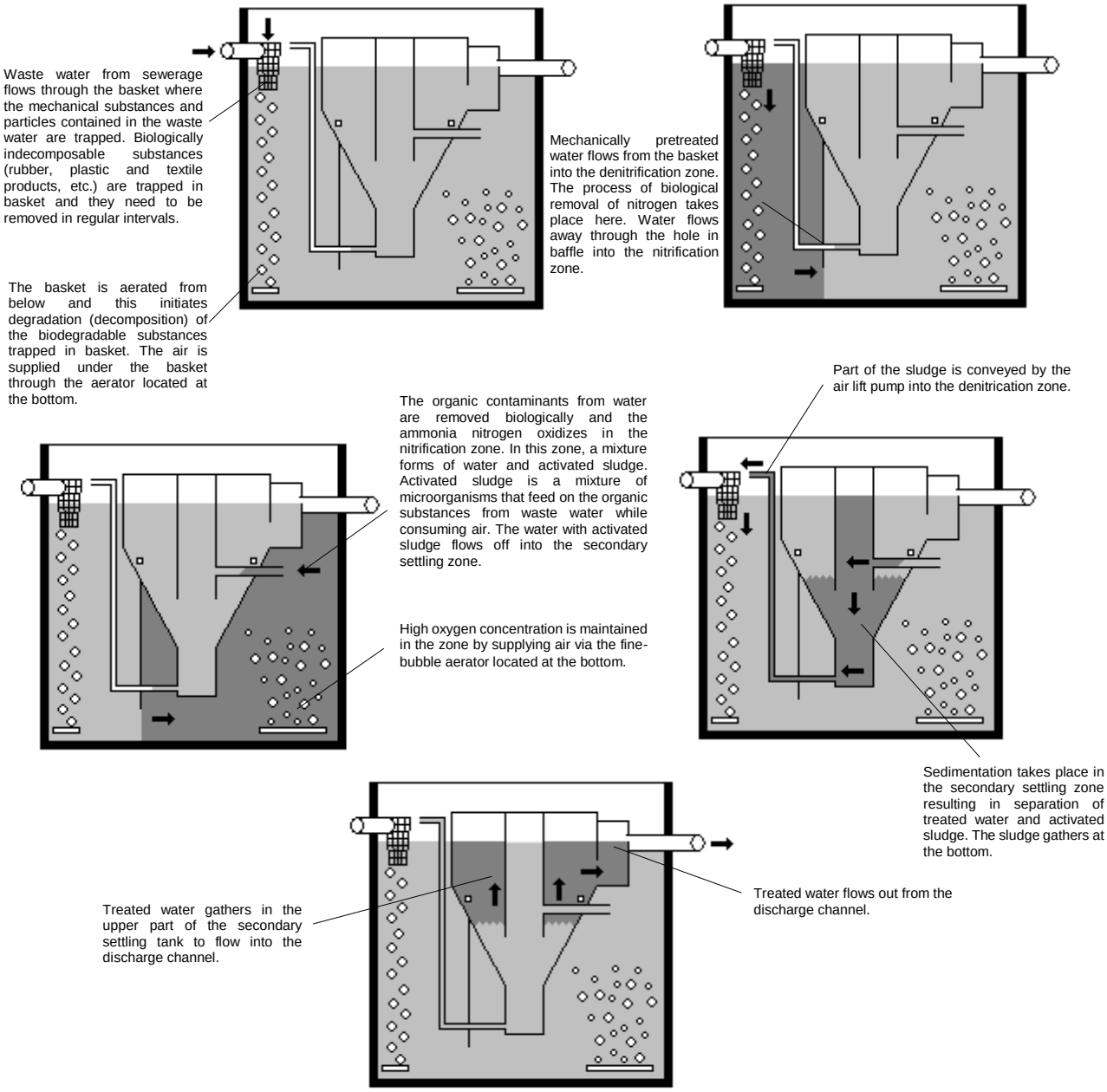

During the treatment period, 2 phases **C1** and **C2** alternate cyclically. The blower is on during phase **C1** (this results in aeration) and off during phase **C2** Activation (deactivation) of the blower is controlled by the timer in variant **BASIC** or timer/CU Optima/switch relay in type **OPTIMA**.

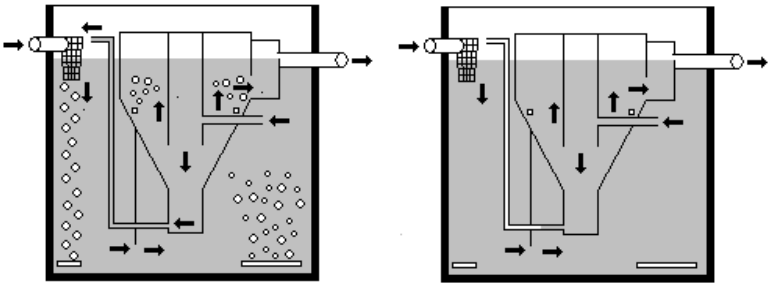

Phase C1- Blower ON Phase C2 – Blower is OFF

Variant COMFORT/EXCLUSIVE/EXCLUSIVE UV

Waste water is treated in the BIO CLEANER® reactor divided by baffles and installations into separate functional zones according to the diagram below:

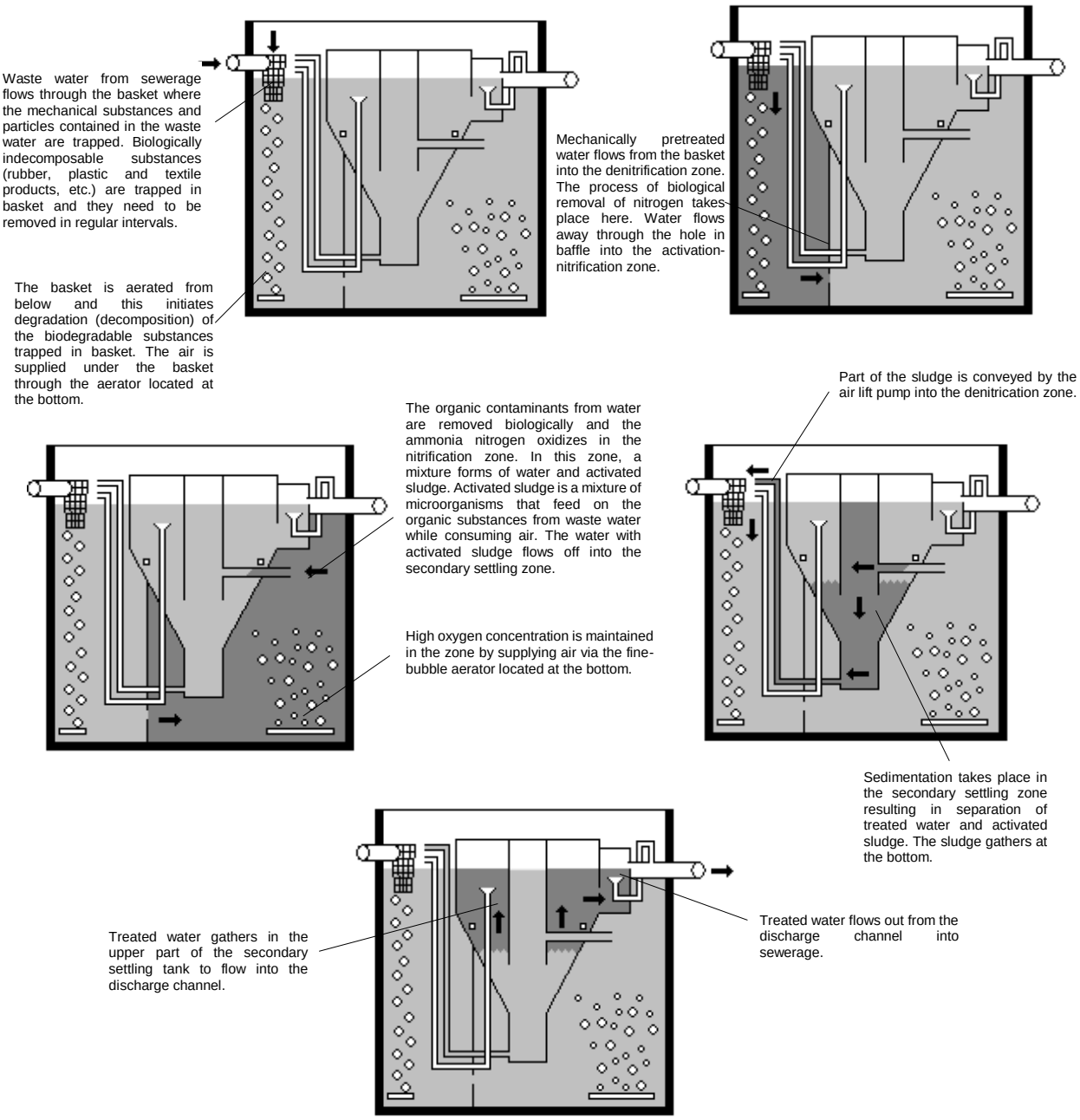

During the treatment period, 2 phases **C1** and **C2** alternate cyclically. The blower is on during phase **C1** (this results in aeration) and off during phase **C2.**

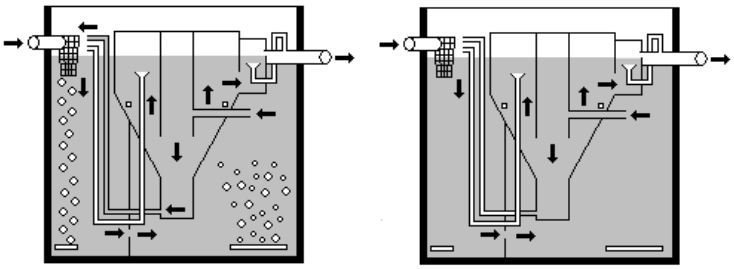

Phase **C1** – blower on Phase **C2** – blower off

The floating impurities may gather during the phase **C1** and **C2** in the secondary settling zone. That is why the secondary settling zone is treated automatically in a frequency of 1 to 12 times a day (by the setting). Treatment is divided into the phases marked below as **C3** to **C6** and it takes place according to the following diagram:

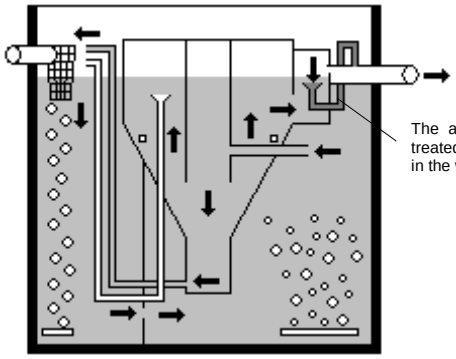

The air lift pump draws off a part of treated water and, as a result, the level in the whole tank goes down.

Phase **C3**

The air lift pump draws impurities from the level for the first time.

The air supplied through the aeration frame will mix the secondary settling zone.

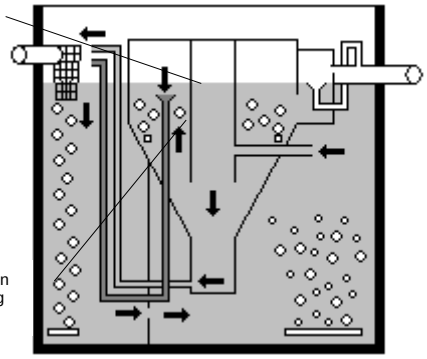

Phase **C4**

With the membrane blower off the mixture in secondary settling zone gets still and impurities are brought up to the level.

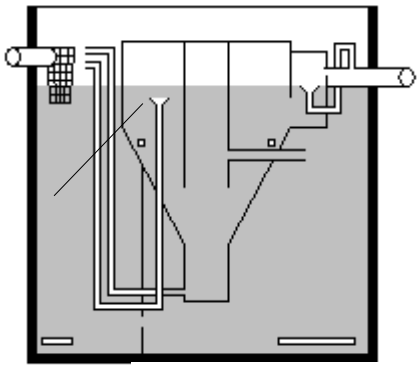

Phase **C5**

The air lift pump draws impurities off the level for the second time.

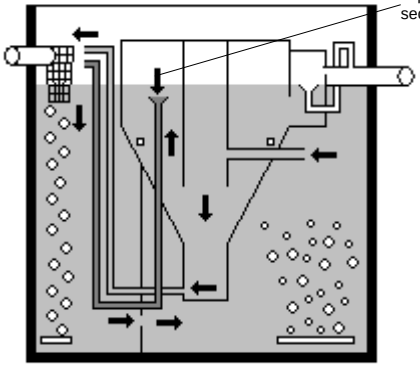

Phase **C6**

11 WWTP BASIC

It is the basic type of WWTP. Individual parts and elements of WWTP are depicted on the figure below.

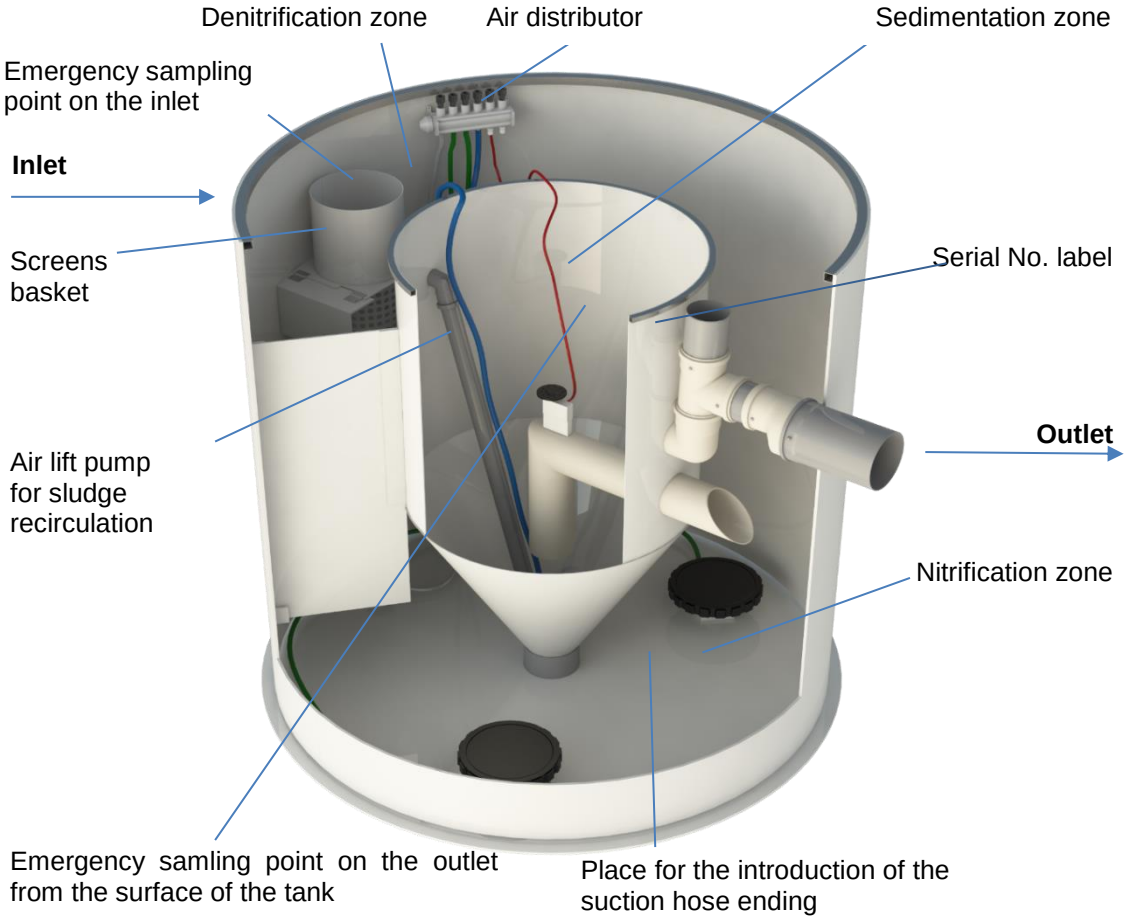

Fig. 4: WWTP BASIC in PP tank

11.1 WWTP OPERATION CONTROL

Expected optimized program settings were made during putting the plant into operation. Do not change these settings intentionally without consulting the licensed dealer or manufacturer since improper settings may cause a malfunction of the WWTP.

WWTP operation is assured by the intermittent blower operation. The intermittent blower operation is assured by the timer into which the blower's power cord is connected. The timer is used to set the operation time (i.e. **C1** phase) and the interruption time (i.e. **C2** phase). The basic setting of intervals is operation of 15 min and interruption of 15 min (this setting is valid for the WWTP ripening time only). Then, such time mode is adjusted that an optimum function of WWTP is assured (mostly the C1/C2 - 15/30 mode). The 15/45 (on/off) operation can be adjusted at night or in the hours when there is no inlet in WWTP (e.g. when you are in the job, at school, etc.). Caution! This setting will not probably be sufficient in weekends or during the holiday spent at home. Insufficient aeration time will be demonstrated by an odour from WWTP!
The preset times can be changed in the cases that are detailed below in the manual or depending on specific WWTP operating conditions on the basis of the measured concentrations of O_2.

It is absolutely prohibited for the interruption time to exceed 2 hours!

11.1.1 Timer (on/off) setting procedure

Current time setting
Turn the rotary annulus with lamellas in the direction of arrow until the pointer on the instrument's central part shows the current time. The timer is brought into operation when the instrument is connected to the socket.

Checking the switching program
Timer is fitted with the lamellar annulus of blue or grey colour. Switching of the instrument in specific time interval is preset by tilting one or more lamellas into the annulus.

Fig. 5: Timer [1)]

11.2 AIR DISTRIBUTION

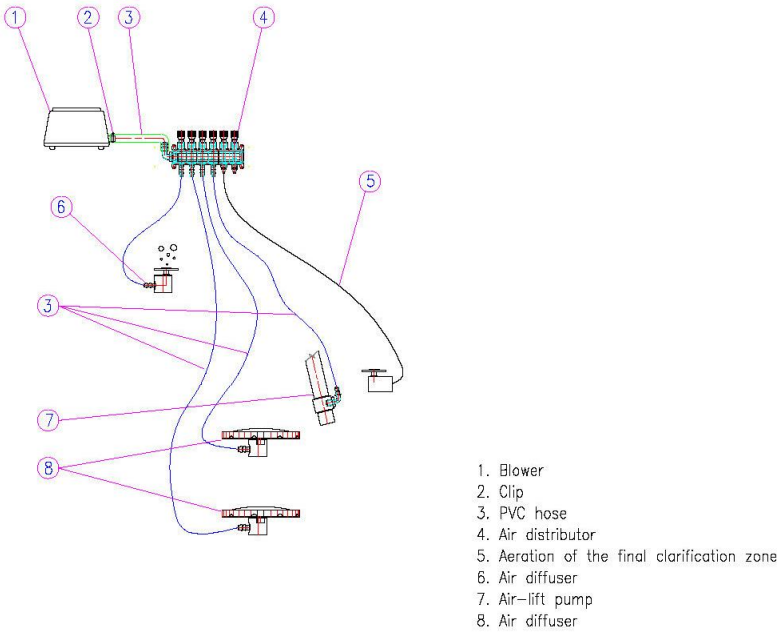

Fig. 6: WWTP BASIC Air distribution scheme (BC 4-6)

12 WWTP OPTIMA

In comparison with the BASIC type, the OPTIMA type WWTP is fitted with an air lift pump for a withdrawal of floating impurities (the manual operation only) and with a down flow baffle on the outlet pipe. Individual technological parts of WWTP are detailed in the figure below.

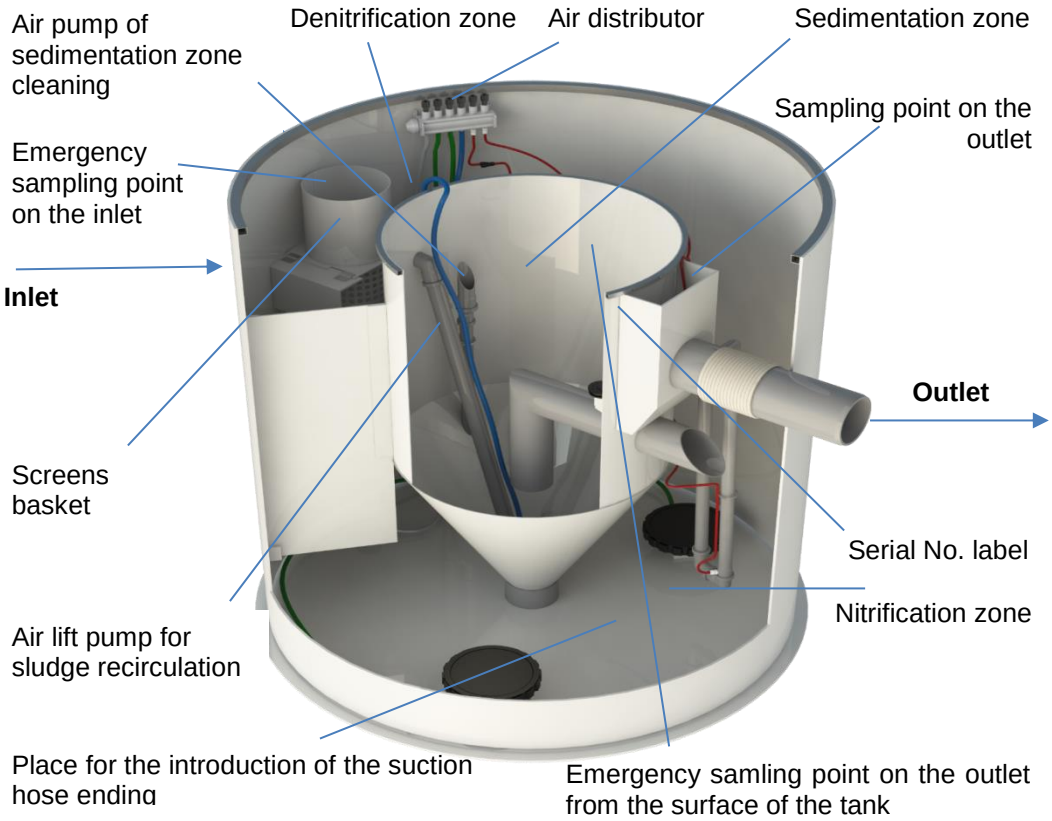

Fig. 7:WWTP OPTIMA in PP tank

12.1 WWTP OPERATION CONTROL

WWTP operation is assured by the intermittent blower operation. The intermittent blower operation is ensured by the time relay or a simple "OPTIMA“ control unit with 10 preset programs.

While putting the waste water treatment plant into operation, the presupposed optimum setting of the blower operation was done. Avoid changing this setting wilfully without prior consultation with the authorized dealer or manufacturer because improper setting may cause malfunction of WWTP.

12.1.1 Time Relay

If the source of air is represented by the three-phase Effepizeta (BC 50) ¤) blower, its operation is controlled by the intervals preset on the time relay. The setting time for blower operation and rest is similar to the process used in the WWTP controlled by the timer and it depends on the actual loading of WWTP.

It is absolutely prohibited for the interruption time to exceed 2 hours!

12.1.2 Way of settings (ON/OFF) time relay ¤)

Settings of time intervals do by the rotary switches. The first two are for settings of run and the next two are for stop of blower.

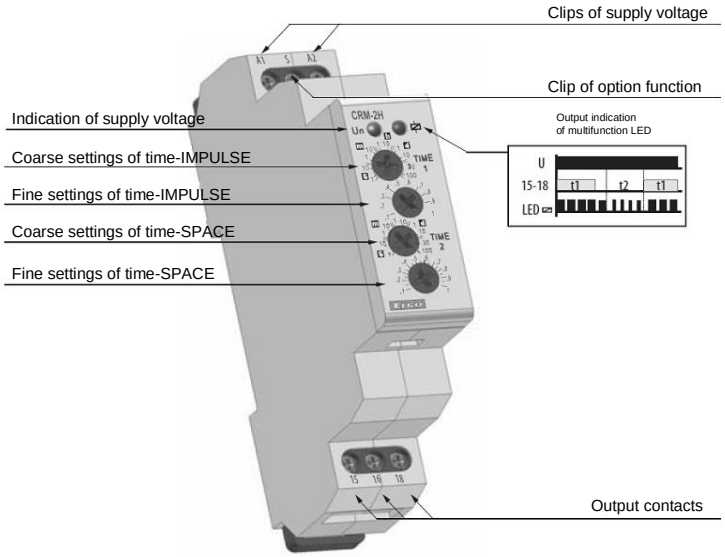

Fig. 8: Time relay

Description of the control elements

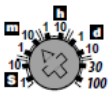
OPERATION - coarse setting

OPERATION - fine setting

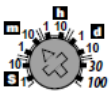
STOP - coarse setting

STOP - fine setting

Time setting

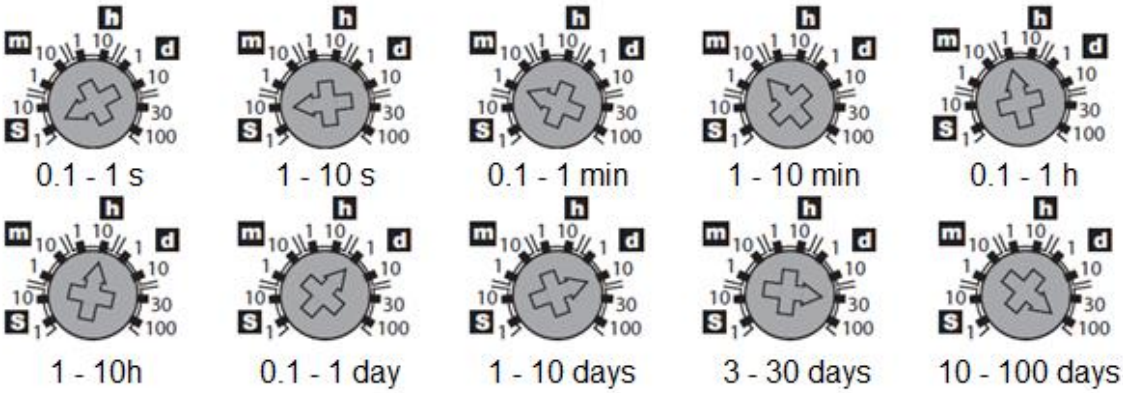

Fig. 9: Time relay setting

12.1.3 Control unit – OPTIMA ¤)

The WWTP operation, i.e. blower activation and deactivation, is controlled by the control unit which the blower power cable is connected into. The control unit can be used for setting one of the operation time interval programs (i.e. phase **C1**) and the interruption time (i.e. phase **C2**).

The instrument display displays alternatively the selected program and time in minutes remaining to the operation time end or to the interruption of the connected blower's operation. The shining spot behind the right-hand digit indicates the blower operation.
Maximum permissible socket loading: 230V / 2,5A.

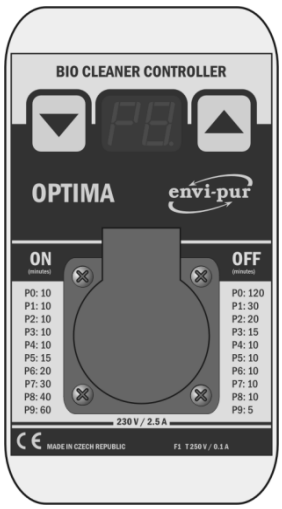

Fig. 10: OPTIMA control unit ¤)

12.1.4 Setting the time intervals for phases C1 and C2

Each pressing of one of the instrument buttons will increase or decrease the program by one step and the dot behind letter P will shine to indicate the instrument is in the setting mode. After 3 sec since the last button was pressed, the last selected program is saved to the memory. The selected program will remain stored in the instrument after the supply voltage failure. When a program is changed, the program is always started by the operation mode, i.e. phase **C1**. Select the program by following the table below:

P_ code	**0**	**01**	**02**	**03**	**04**	**05**	**06**	**07**	**08**	**09**
C1 (min)	10	10	10	10	10	15	20	30	40	60
C2 (min)	120	30	20	15	10	10	10	10	10	5

12.1.5 Replacing the fuse

If necessary, replace the fuse as detailed below:

- Before replacing fuse, always remove the instrument's supply cable from the socket.
- Remove the fuse cap to replace the fuse with specified type (T250V / 0,1 A).
- Before connecting the supply cable, screw the cap with new fuse back into the instrument.

- **Before replacing fuse, always remove the instrument's supply cable from the socket.**
- **Avoid confusing the supply cable with the blower's supply cable.**
- **Always use the fuse of the same type and rated value.**

12.2 AIR DISTRIBUTION

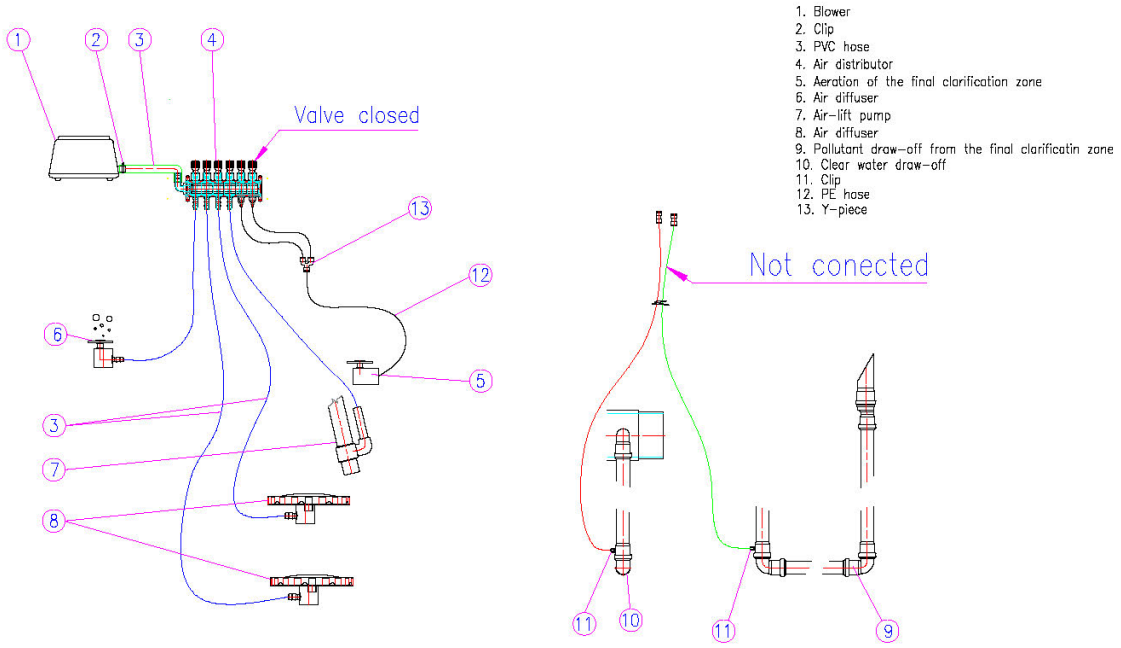

Fig. 11: WWTP OPTIMA Air distribution scheme (BC 4 – BC 10)

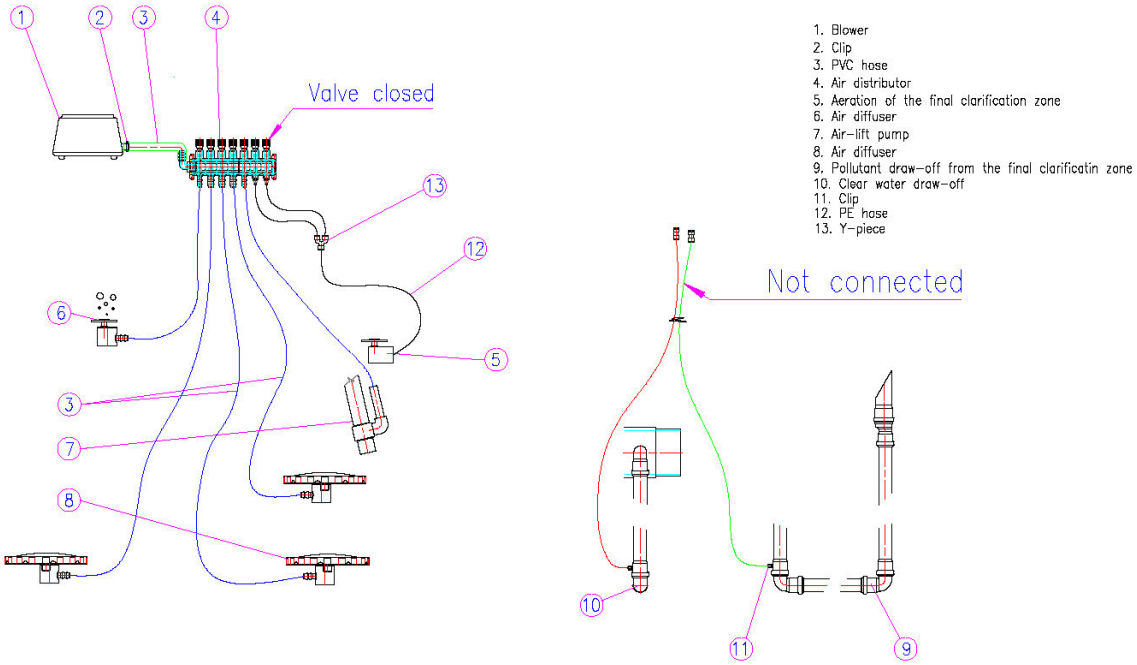

Fig.12: WWTP OPTIMA Air distribution scheme (BC 12)

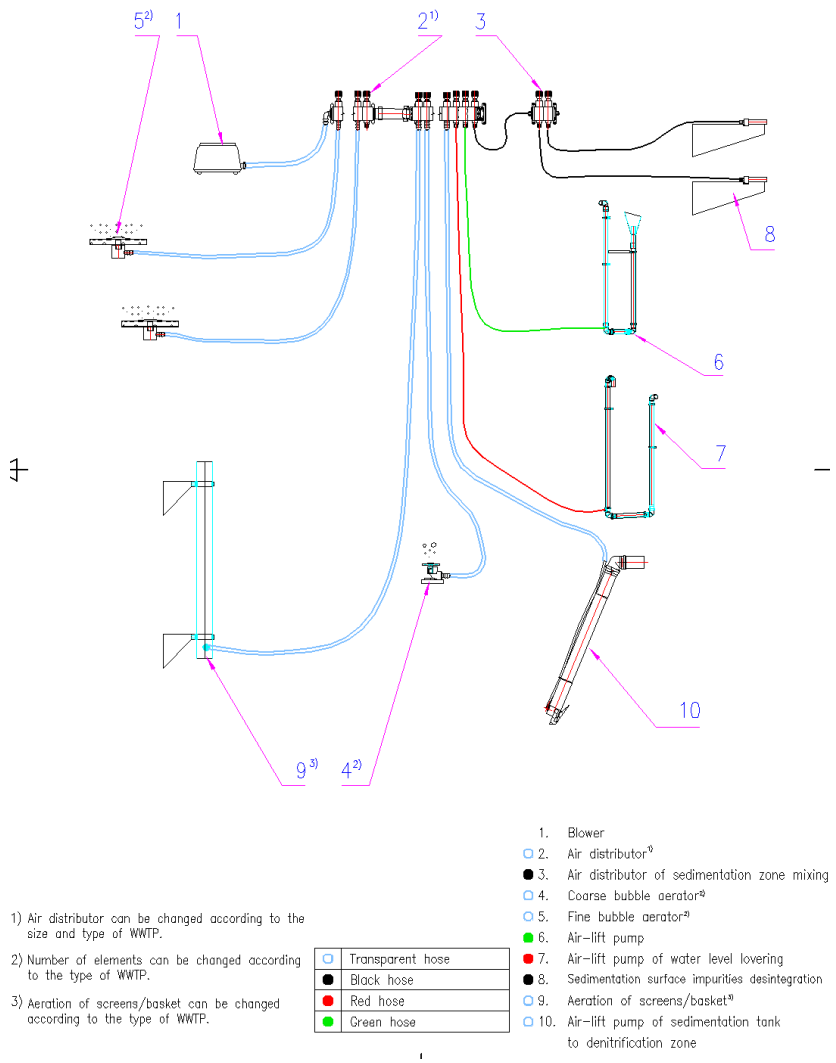

Fig. 13: WWTP OPTIMA Air distribution scheme (BC 16, 20, 25, 30, 40, 50)

13 WWTP COMFORT

As compared to the previous types, this WWTP technology is equipped with the automatic level reduction in the secondary settling tank and the consequent withdrawal of floating impurities by the air lift pump. The operation is controlled by the BCC control unit. ¤)
Individual technological parts of WWTP are detailed in the figure below.

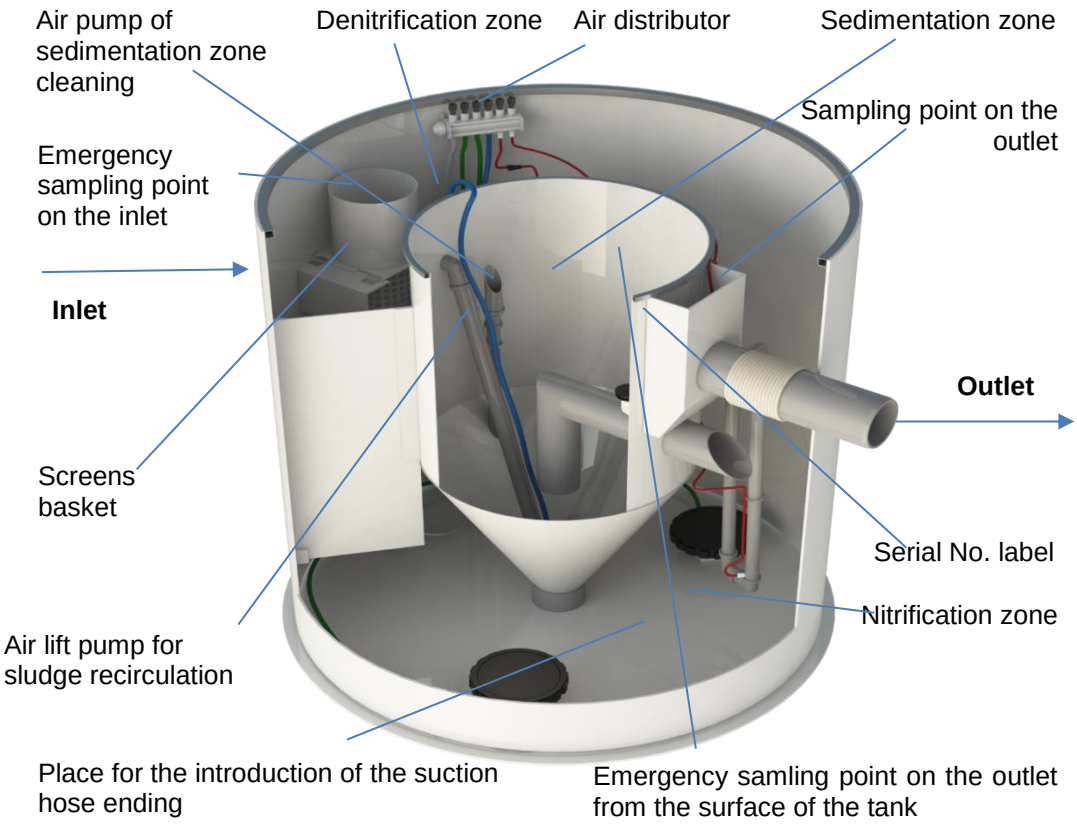

Fig. 14: WWTP COMFORT in PP tank

13.1 WWTP OPERATION CONTROL

13.1.1 COMFORT PLUS Control Unit

On customer's request, this WWTP type can be equipped with a more sophisticated control unit - COMFORT PLUS. Operation of this unit is described in detail in Chapter 14.1.1.

13.2 AIR DISTRIBUTION

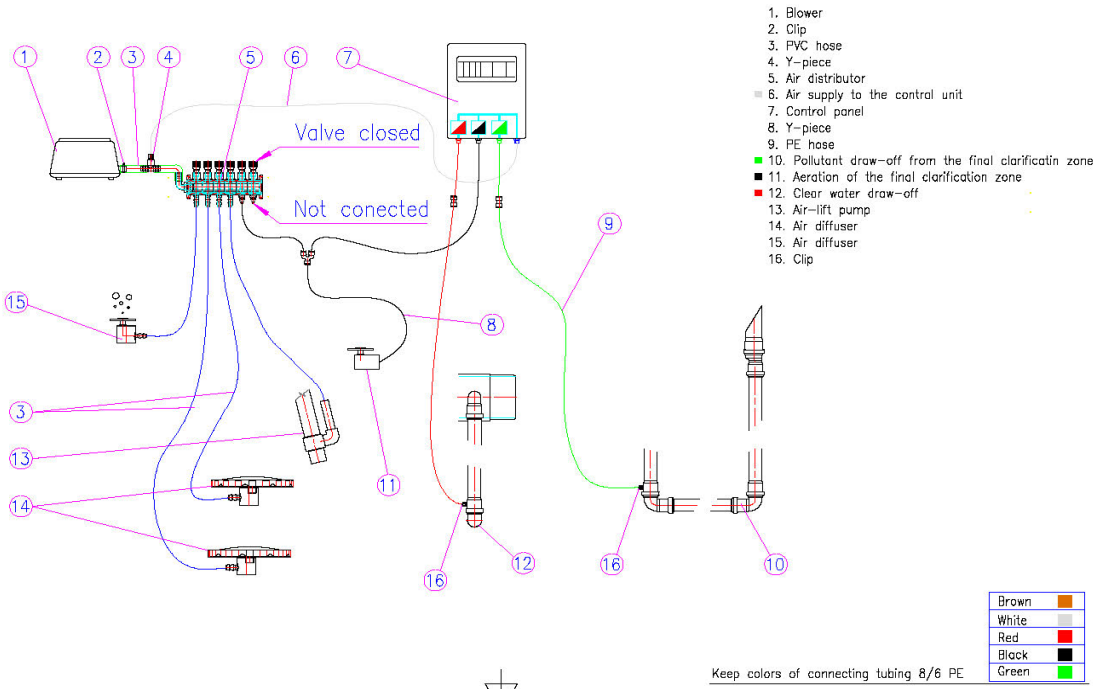

Fig. 16: WWTP COMFORT Air distribution scheme(BC 4 – BC 10)

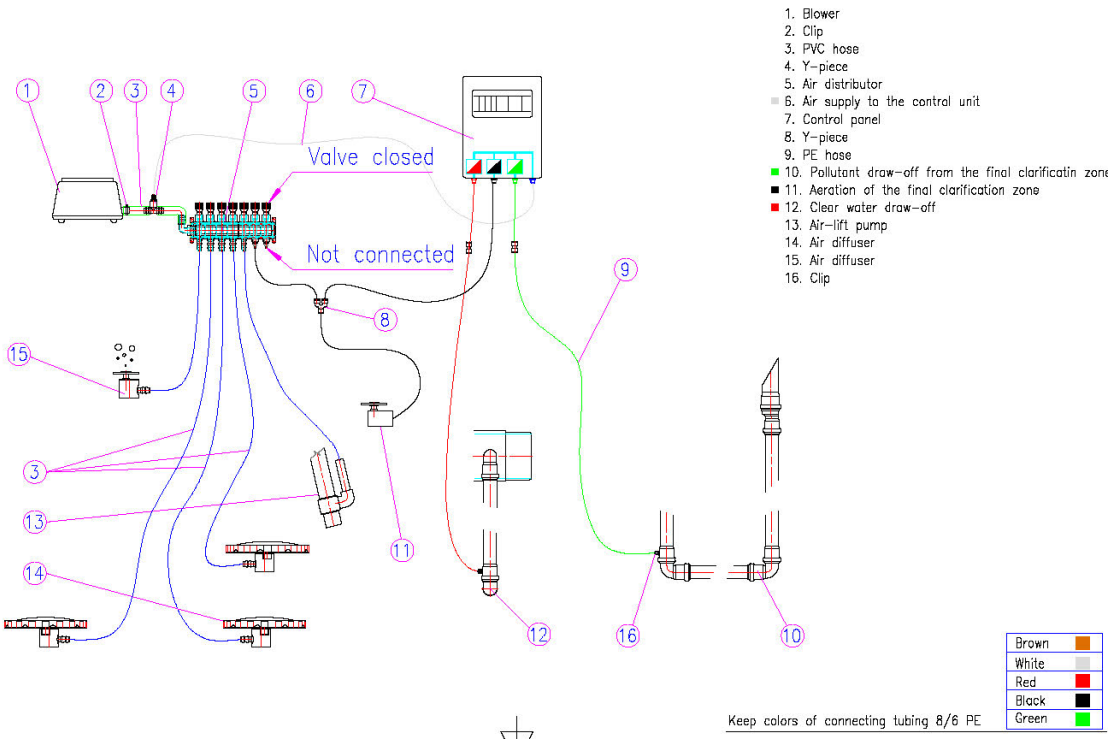

Fig. 17: WWTP COMFORT Air distribution scheme (BC 12)

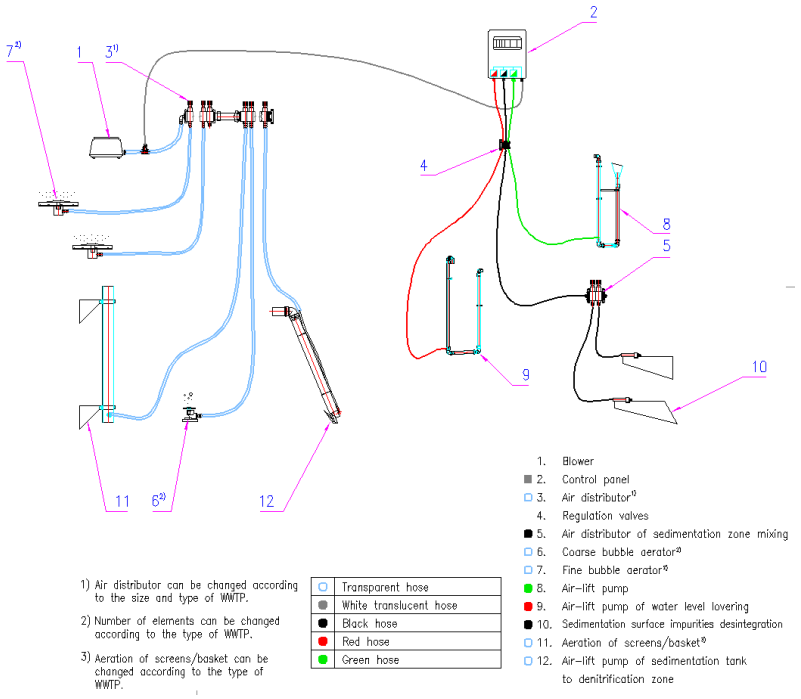

Fig. 18: WWTP COMFORT Air distribution scheme COMFORT (BC 16, 20, 25, 30, 40, 50)

14 WWTP EXCLUSIVE

This WWTP type is extra equipped with the tertiary final treatment at the outlet and with the set for precipitation of excessive phosphorus. Mechanical tertiary filter improves catchment of possible impurities escaped from the secondary settling tank. The filter is fitted in a separate structure on the outlet pipe and it is gravity flown.
The filter is composed of the plastic supporting structure upon which a meshwork with a mesh of 0.5 mm in size is installed. Impurities caught on the filter are automatically shaken off into the container the volume of which is consequently pumped off in automatic manner by the air lift pump back into the aeration system.
Filter cleaning is controlled automatically from the WWTP control unit that opens and closes individual solenoid valves in the preset intervals. This automatic cleaning is set on the control unit using Parameter P10. For more information see Chapter 14.1.1.

For WWTP to operate correctly it is necessary to perform periodic maintenance of the tertiary filter. Instructions are given in Chapter 20.7.2.

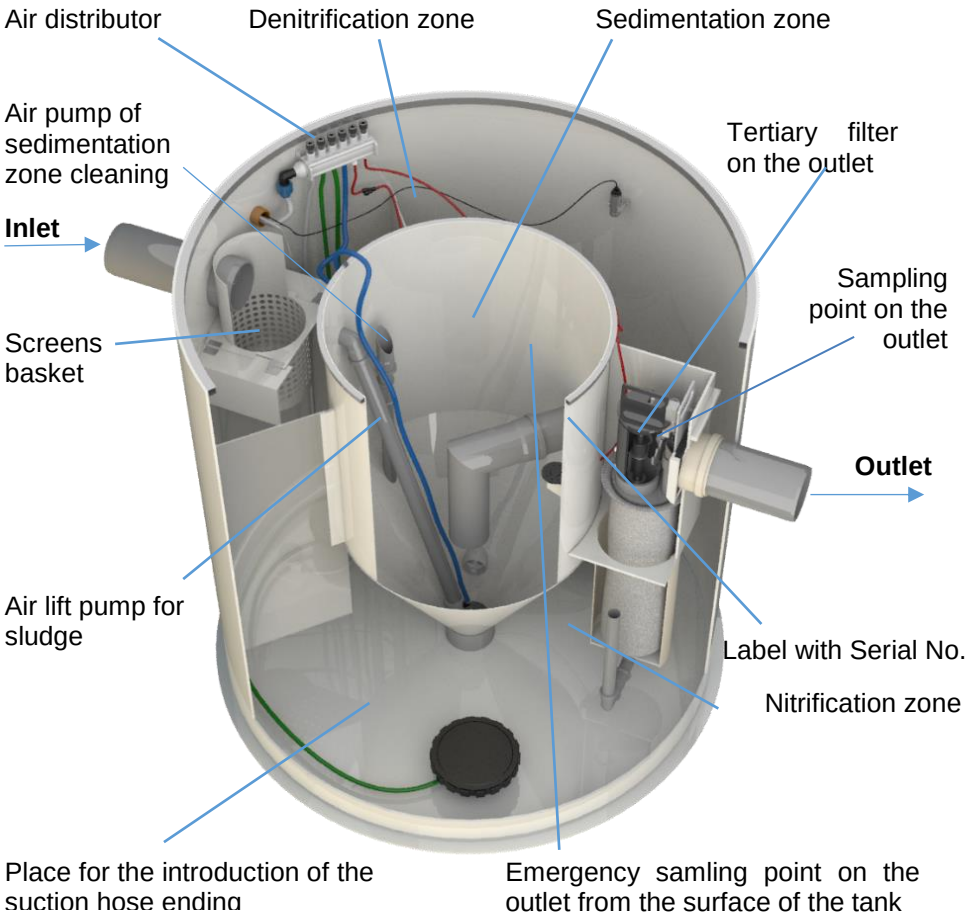

Fig.19: WWTP Exclusive

14.1 AIR DISTRIBUTION

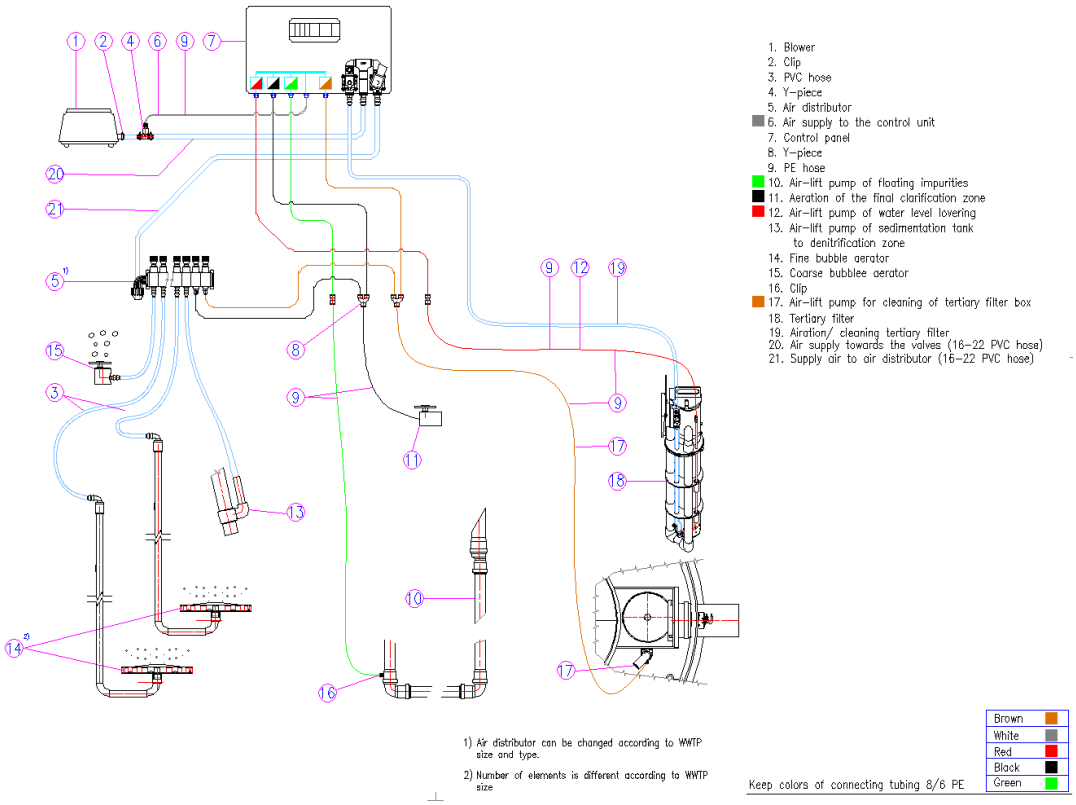

Fig. 20: WWTP EXCLUSIVE Air distribution scheme (BC 4-12)

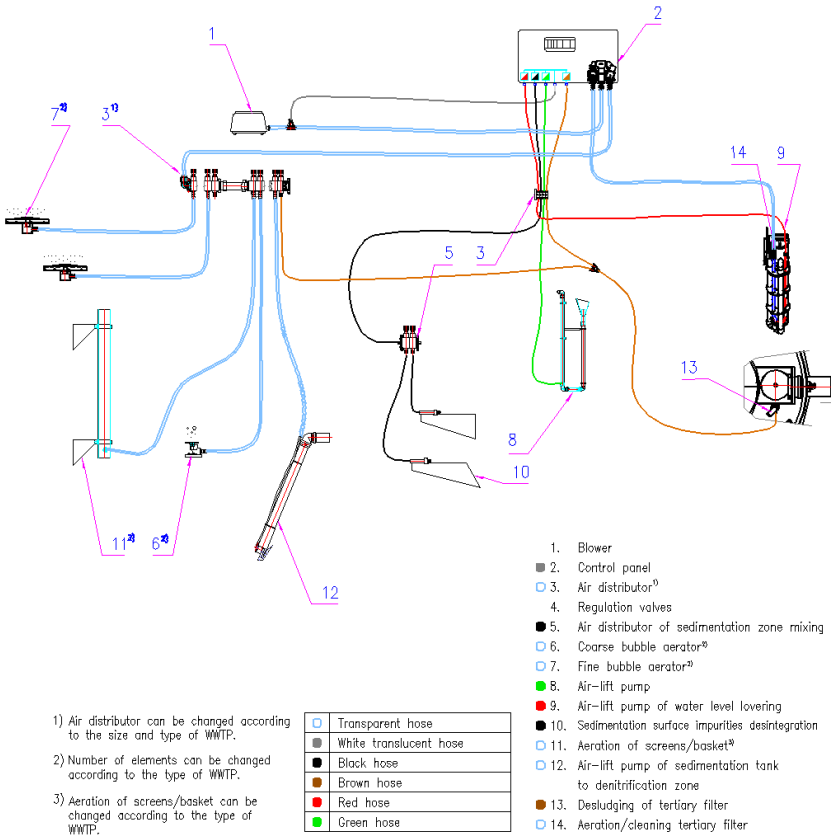

Fig. 21: WWTP EXCLUSIVE Air distribution scheme (BC 16, 20, 25, 30, 40, 50)

14.2 WWTP OPERATION CONTROL

14.2.1 COMFORT PLUS [R)] Control Unit

The power cabinet contains electrical elements and parts that are used to activate and deactivate the blower and to open and close the supply of air to the selected parts of WWTP. The power cabinet's front face is equipped with the circuit breaker for turning on/off all the WWTP's electrical parts and with the control unit's operation panel. A socket for blower connection is located on lateral side of the power cabinet.

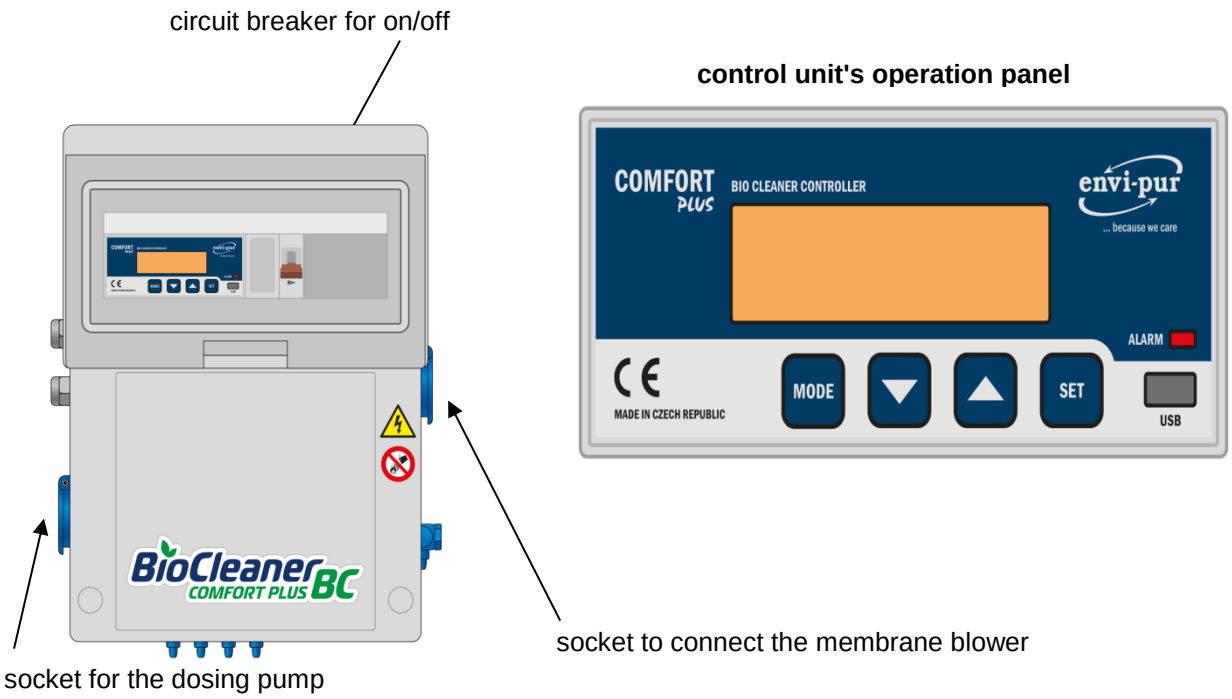

Fig. 22: Control unit's operation panel

Operating regimes of control unit COMFORT Plus and types of BC

Size	WWTP type		CU regime	Electro switch board design	Difference in settings	Air connection on the switchboard
BC4-50 (Cylindrical tank)	COMFORT		COMFORT	Plastic		
	COMFORT Plus	(polylok)	COMFORT+	Plastic	P8 – filter desludging	
	EXCLUSIVE	(blanket)	COMFORT++	Metal	P10 - filter desludging	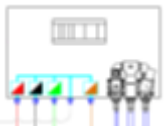
	EXCLUSIVE UV	(blanket+UV)	COMFORT++	Metal	P10 - filter + UV desludging	

BC16-50 (Container)	COMFORT		COMFORT	Plastic		
	EXCLUSIVE	(polylok)	COMFORT+	Plastic	P8 – filter desludging	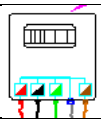
	EXCLUSIVE UV	(polylok+UV)	COMFORT++	Plastic	P10 - filter + UV desludging	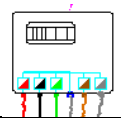

BC 16-50 DUO Cylindrical	COMFORT DUO		COMFORT	Plastový rozv.	P11 – sludge pumping from sedimentation zone to the primary sedimentation tank	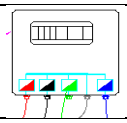
	EXCLUSIVE DUO	(blanket)	COMFORT++	Plechový rozv.	P10 – filter desludging P11 - sludge pumping from sedimentation zone to the primary sedimentation tank	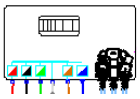
	EXCLUSIVE UV DUO	(blanket+UV)	COMFORT++	Plechový rozv.	P10 – filter + UV desludging P11 - sludge pumping from sedimentation zone to the primary sedimentation tank	

The control unit is used to control the WWTP operation (for gradual execution of phases **C1** to C**C6** The operation panel can be used to monitor and, if necessary, change the functions described below. The control unit can operate in two operation modes:

- Control mode,
- setting mode.

Description of the unit´s operation phases C1 to C6 is given in the table below:

Phase	Description
C1	wastewater treatment – membrane blower ON
C2	wastewater treatment – membrane blower OFF
C3	cleaning of the reactor´s secondary settling zone –partial pumping off of the treated water in order to lower the water level– membrane blower ON
C4	cleaning of the reactor´s secondary settling zone – mixing of the zone by air with initial pumping off of water-surface contaminants- membrane blower ON
C5	cleaning of the reactor´s secondary settling zone – calming-down break - membrane blower OFF
C6	cleaning of the reactor´s secondary settling zone – another pumping off of water-surface contaminants - membrane blower ON
Dosing	Dosing of phosphorus is independent of the other functions of the control unit.
Filter purging and UV lamp	Initial purging is done in 30 minutes after the main cycle, and the follow-up purging runs at the pre-set intervals.
Mixing	Mixing interval settings

14.2.2 Control mode

This is a normal operation condition, in which the unit is always running after the circuit breaker has been switched on and the setting mode completed. The mode is indicated by showing on the display the phase **C1** to **C6** that is being currently running and the number of minutes until the end of the phase (minutes are counted down).

14.2.3 Setting mode

The setting mode enables you to carry out the following operations by engaging the controls on the control unit´s panel:

Setting the time intervals for phases C1 and C2,

setting the parameters of phases C3 to C6 (cleaning of the reactor´s secondary settling zone),

starting-up and stopping the phases C3 to C6 (cleaning of the reactor´s secondary settling zone),

setting the night-time and weekend mode,

setting the dosing pump,

setting the filter purging and UV lamp,

correction of current time of the control unit.

The settings can be made by pushbuttons on the control unit´s panel by selecting appropriate mode and parameter. The selected mode and parameter are displayed on the display. Both the mode and parameter can be changed. The parameter to be changed is displayed with a dark background.

The pushbutton functions in the setting mode are given in the following table:

BUTTON	MODE	DOWN ARROW ▽	UP ARROW △	SET
Function	Mode selection	Changing the parameter to be set; end of action in START mode		Confirming the selected mode or the value of the parameter to be set

The mode description is given in the following table:

COMFORT Plus CU modes			
Comfort	**Comfort+**	**Comfort**	**Comfort+**
P1	**P1**	**P1**	**P1**
P2	**P2**	**P2**	**P2**
P3	**P3**	**P3**	**P3**
P4	**P4**	**P4**	**P4**
P5	**P5**	**P5**	**P5**
P6	**P6**	**P6**	**P6**
	P8		**P8**
Actual time	**Actual time**	**Actual time**	**Actual time**
Diagnostics	**Diagnostics**	**Diagnostics**	**Diagnostics**
			MTH2 Total relay switching time RE1 (blower operation)
			MTH3 Total time of fault signaling except the time of complete shutdown
MODEM	**MODEM**	**MODEM**	**MODEM**

<u>Setting the time intervals for Phase C1, C2 and Mixing interval</u>

use the **MODE** button to select the **P1** mode and confirm by pressing **SET** button. The mode is shown on the display together with the code of the preset C1 and C2 parameters according to the table below:

Mode	Code	0	1	2	3	4	5	6	7	8	9	10	11	12	Oxygen sensor
P1	C1 (min)	10	10	10	10	10	10	10	10	15	20	30	40	60	The blower operation is controlled by oxygen sensor only – no time control.
	C2 (min)	120	60	50	40	30	20	15	10	10	10	10	10	5	

- Mixing – setting parameter (parameter that can be set). Recommended setting - each 10 min of standstill mode, mixing is needed for 10 s.
- After the mode has been selected and confirmed, parameters can be changed using the buttons with **ARROW** up and down. After the required parameter has been selected, confirm by pressing **SET** button and return to the **MODE** selection by pressing **SET** button repeatedly.
- You can continue by selecting another mode by pressing the **ARROW** buttons or cease setting - after 30 s the unit will automatically enter the Control mode.

Setting the parameters of phases C3 to C6 (cleaning of the reactor´s secondary settling zone)

Start-up time

- Use the **MODE** button and the **ARROWS** and select **P2** mode and confirm it by pressing the **SET** button. The mode will be shown on the display together with the time at which cleaning will begin (e.g. “P2, 23 hours” shall mean that Phase 3 will be started-up at 11 p.m.).
- After you have selected and confirmed the mode, you can change the parameters by down and up arrows. After you have **SET** the required parameter, confirm it by pressing the **SET** button. By pressing the **SET** button again, you can go back to the **MODE** selection.
- You can go on by selecting another mode using the **ARROW** buttons or quit the setting and the unit will switch automatically to the Control mode after 30 seconds.

Period

- Use the **MODE** button and the **ARROWS** and select **P3** mode and confirm it by pressing the **SET** button. The mode will be shown on the display together with the parameter value (1,2,3 hours up to 24 hours or parameter START). If you confirm the **START** option, the mode will be started-up immediately and previous settings remain unchanged.

- For example, code “12” shall mean that phases **C3 – C6** are to be started-up every 12 hours; code “17” shall mean that phases **C3 – C6** are to be started-up every 17 hours.
- After you have selected and confirmed the mode, you can change the parameters by down and up arrows. After you have **SET** the required parameter, confirm it by pressing the **SET** button. By pressing the **SET** button again, you can go back to the **MODE** selection.
- You can go on by selecting another mode using the **ARROW** buttons or quit the setting and the unit will switch automatically to the Control mode after 30 seconds.

The night and weekend operation (secondary timing)

- Use the **MODE** button and the **ARROWS** and select **P4** mode and confirm it by pressing the **SET** button. The mode will be shown on the display and the code of the set parameter will be displayed at the same time according to the following table:

Parameter P4	Meaning
0	The setback mode is not used.
1	Setback mode daily from 11:00 p.m. to 5:00 a.m.
2	Setback mode from Saturday´s 0:00 a.m. to Monday´s 0:00 a.m.
3	Combination of 1 + 2 (night and weekend)
4	Secondary timing at active input of DV4

- After the mode has been selected and confirmed, parameters can be changed using the buttons with ARROW up and down. After the required parameter 1 – 4 has been selected, confirm by pressing **SET** button and return to the **MODE** selection by pressing **SET** button repeatedly.

You can continue by mode P5 (Setting of time intervals C1, C2 in secondary mode)

- Use the **MODE** button and the **ARROWS** and select **P5** mode and confirm it by pressing the **SET** button. The mode will be shown on the display and the code of the set parameter will be displayed at the same time according to the following table:

Mode	Code	0	1	2	3	4	5	6	7	8	9	10	11	12	Oxygen sensor
P1	C1 (min)	10	10	10	10	10	10	10	10	15	20	30	40	60	The blower operation is controlled by oxygen sensor only – no time control.
	C2 (min)	120	60	50	40	30	20	15	10	10	10	10	10	5	

- After you have selected and confirmed the mode, you can change the parameters by down and up arrows. After you have **SET** the required parameter, confirm it by pressing the **SET** button. By pressing the **SET** button again, you can go back to the **MODE** selection.
- Codes 0 to 12 are used for the WWTP operation time control only. If the **oxygen sensor** code is selected the WWTP operation is controlled by the oxygen sensor only (it is located in the nitrification part of WWTP).
- In case of selecting the operation with **oxygen sensor**, use the arrows to set the parameter – **limit and hysteresis.**
- Use arrows and **SET** button to set the parameters – **limit and hysteresis** to the required values (the basic values are already preset), limit is 1.5 mg/l and hysteresis is 0.5 mg/l. The blower is activated when the amount of dissolved oxygen drops below 1.5 mg/l and deactivated when the value of 2 mg/l is exceeded.
- After you have selected and confirmed the mode, you can change the parameters by down and up arrows. After you have **SET** the required parameter, confirm it by pressing the **SET** button. By pressing the **SET** button again, you can go back to the **MODE** selection.
- Use arrows and **SET** button to continue setting of the parameter **AERATION** to set it to 20 seconds (blower operation) and 10 minutes (pause). Setting of these parameters is operational regardless of the amount of dissolved oxygen.
- After you have selected and confirmed the mode, you can change the parameters by down and up arrows. After you have **SET** the required parameter, confirm it by pressing the **SET** button. By pressing the **SET** button again, you can go back to the **MODE** selection.
- Use arrows and **SET** button to continue setting of the parameter **DENITRIFICATION**. Set it to 40 minutes (blower operation disabled) and 120 minutes (periodic repetition period). CAUTION: Regular aeration function remains operational during the disabled period.
- After you have selected and confirmed the mode, you can change the parameters by down and up arrows. After you have **SET** the required parameter, confirm it by pressing the **SET** button. By pressing the **SET** button again, you can go back to the **MODE** selection.
- You can go on by selecting another mode using the **ARROW** buttons or quit the setting and the unit will switch automatically to the Control mode after 30 seconds.

You can continue by mode P6 Dosing – Setting of dosing pump

- Phosphorus dosing: Dosing of phosphorus is independent of the other functions of the control unit. It can be set via the menu under item **P6** Dosing. It is possible to set the switching time in seconds (size of P dose) and the interval of repeating in hours. Setting the former or the latter time value to 0 will cause disabling the dosing function. Once the relay RE9 is engaged, indication on the control unit´s LCD will be turned on. The first engaging of the dosing relay occurs one minute after turning on the control unit or after making a change in the parameter settings.
- Use the **MODE** button and the **ARROWS** to select the mode **P** and confirm it by pressing the **SET** button. The mode will be shown on the display together with the currently set dosing time (in seconds) and currently set delay of the dosing start-up time (in hours).
- After you have selected and confirmed the mode, you can change the parameters by down and up arrows. After you have **SET** the required parameter, confirm it by pressing the **SET** button. By pressing the **SET** button again, you can go back to the **MODE** selection.

- You can go on by selecting another mode using the **ARROW** buttons or quit the setting and the unit will switch automatically to the Control mode after 30 seconds.

Containerized WWTP BC 16-50 K EXCLUSIVE- continue by mode P8 Purging of Mechanical Filter and UV

- It is possible to set the time of filter purging process by engaging the relay RE7 via the menu **P8**. It is possible to set the engaging time in seconds and the interval of repeating in hours. Once the relay RE7 is engaged, indication on the control unit´s LCD will be turned on. Initial purging is done in 30 minutes after the main cycle, and the follow-up purging runs at the pre-set intervals.
- Use the **MODE** button and the **ARROWS** and select **P8** mode and confirm it by pressing the **SET** button. The mode will be shown on the display together with the currently set purging time (in seconds) and currently set delay of the purging start-up time (in hours).
- After you have selected and confirmed the mode, you can change the parameters by down and up arrows. After you have **SET** the required parameter, confirm it by pressing the **SET** button. By pressing the **SET** button again, you can go back to the **MODE** selection.
- You can go on by selecting another mode using the **ARROW** buttons or quit the setting and the unit will switch automatically to the Control mode after 30 seconds.

In the WWTP's in circular tank - BC4-50 EXCLUSIVE, BC4-50 EXCLUSIVE UV - proceed to P10 mode - Setting the time intervals for Phases C7-C9 (tertiary filter sludging)

- Use the **MODE** button to select the **P10** parameter and confirm by pressing **SET** button. The real time when the treatment process is to be started is shown in the first two digits of the display (e.g. 02 h means that the process will start at 2 o'clock a.m.). The start time can be set in hours with a 1-hour step. Select the parameter by pressing the **ARROW UP** o **ARROW DOWN** button and confirm the selection by pressing **SET** button. Press repeatedly the **SET** button. The parameters for setting the time intervals of Phases C7-C9 are displayed. The first numeric value is used for setting the Phase C7 (filter blow), the second numeric value is used for setting the Phase C8 (standstill time), the third numeric value is used for setting the Phase C9 (pumping off the settled impurities from a container of the mechanical filter). Use the **ARROW UP** and **ARROW DOWN** buttons to set the value for Phase C7 (filter blow) and confirm the value by pressing the **SET** button. The filter blow time is set in seconds in a range of 0-999 s. Use the **ARROW UP** and **ARROW DOWN** buttons to set the value for Phase C8 (standstill time) and confirm the value by pressing the **SET** button. Standstill time is set in minutes within the range of 0-99 min. As the last one, use the **ARROW UP** and **ARROW DOWN** buttons to set the value for Phase C9 (pumping off the settled impurities from a container of the mechanical filter) and confirm the value by pressing the **SET** button. The time for pumping off the settled impurities from a container of the mechanical filter is set in seconds in a range of 0-999 s. Press repeatedly the **SET** button using it to end the setting for Phases C7-C9.
- You can continue by selecting and setting another mode by pressing the **ARROW UP** or **ARROW DOWN** buttons, pressing the **SET** button or cease the process of setting - after 30 s the unit will automatically enter the Control mode.

	The zero value in Parameters C7 to C9 means that the given cycle was omitted!
	The basic setting for the process of putting into operation follows: **C7 – 70 s; C8 – 1 min.; C9 – 70 s.**

Current time setting

- Use the **MODE** button and the **ARROWS** to select the current time mode and confirm it by pressing the **SET** button. The mode will be shown on the display in the following order: **DAY, MONTH, YEAR, HOURS and MINUTES**.

  Use the **SET** button to select the parameter to be set. Use the **ARROWS** to set the required parameter and confirm it by pressing the **SET** button. Continue to do so until the time and date are set.
- After you have selected and confirmed the mode, you can change the parameters by down and up arrows. After you have set the required parameter, confirm it by pressing the **SET** button. By pressing the **SET** button again, you can go back to the **MODE** selection.
- You can go on by selecting another mode using the **ARROW** buttons or quit the setting and the unit will switch automatically to the Control mode after 30 seconds.

Counters of operation hours. To keep the records of the operation time, the control unit is equipped with three OH counters working with a 1-minute resolution. The counters´ status remains stored even if the control unit is switched off. It is backed up by a lithium battery (together with real-time clock). The OH status can be displayed via the menu (Diagnostics).

Diagnostics

- Use the **MODE** button and the **ARROWS** to select the Diagnostics mode and confirm it by pressing the **SET** button. The display will show:

  - **MTH1**. Total period of operation of the control unit.
  - **MTH2**. Total period over which relay RE1 is engaged (blower operation)
  - **MTH3**. Total time of failure indication out of the time of full switching-off.
- By pressing the **SET** button again you can go back to the **MODE** selection.
- You can go on by selecting another mode using the **ARROW** buttons or quit the setting and the unit will switch automatically to the Control mode after 30 seconds.

All models can be equipped with a GSM module, which is indicated by adding the symbol**/GSM** (e.g. COMFORT+/GSM).

- **Evaluation of blower failure.** The control unit has an input for connecting a pressure switch at the outlet of the blower. Connection of a switch which is **opened when no pressure is present** and **closed if operating pressure is present** is required.
- **Failure indication and outputs for an alarm horn.** The control unit has two outputs for failure indication and LED indication on the panel (ALARM); the model with GSM module also enables sending a failure message via SMS. At the same time, the failure is indicated on the display of the control unit and with the intermittent light of the ALARM-labelled LED. The failure indication by an alarm horn can be temporarily interlocked by pressing the “SET” button. The text indication on the display remains active. If the failure is not remedied within 10 days, the acoustic alarm will be re-triggered automatically.

15 WWTP EXCLUSIVE UV

It is the EXCLUSIVE type WWTP which have an extra equipment inserted into the tertiary filter structure - the UV lamp.

UV lamp assures disinfection of the treated waste water in terms of microbiology. It is located on the treated water outlet from WWTP in the area of the mechanical filter structure. It is put into operation together with WWTP.

UV lamp is unceasingly in operation and it offers no setting options. If the WWTP unit is in operation the UV lamp is in operation as well.

15.1 UV RADIATION

The equipment is fitted with UV lamp that emits the C-type UV radiation. This radiation may damage the sight, skin and alternatively other organs. To prevent exposure to radiation the reactor is enclosed by cover with a safety switch that cuts off the power supply to UV lamp once the cover is open.

- **Always cut off the power supply before opening the lid.**
- **Never turn on the power supply if UV lamp fails to be installed in the reactor.**
- **Never operate the equipment with damaged cover or safety switch.**

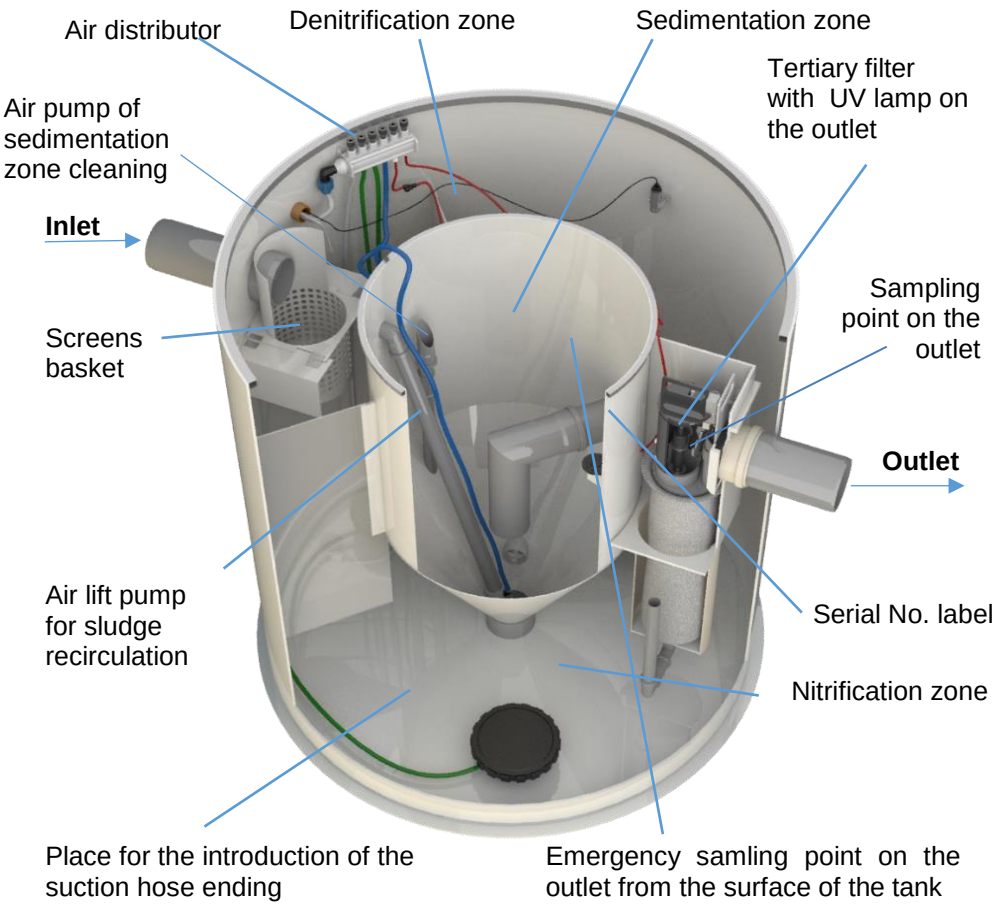

Fig. 23: WWTP EXCLUSIVE UV

15.2 AIR DISTRIBUTION

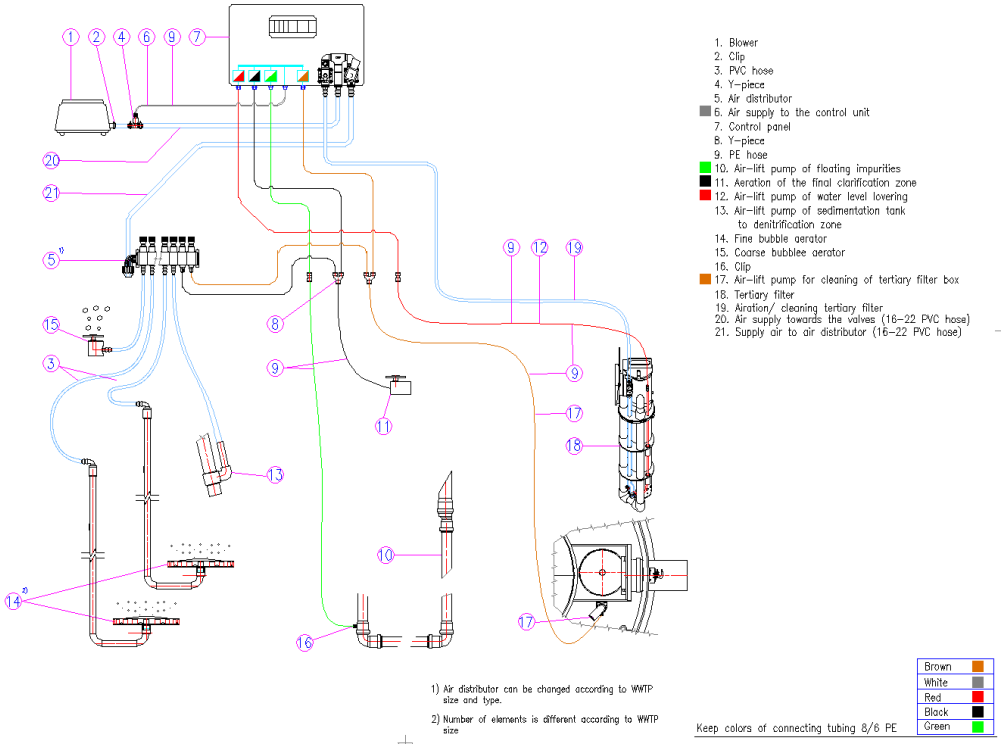

Fig. 24: WWTP EXCLUSIVE UV Air distribution scheme (BC 4-12)

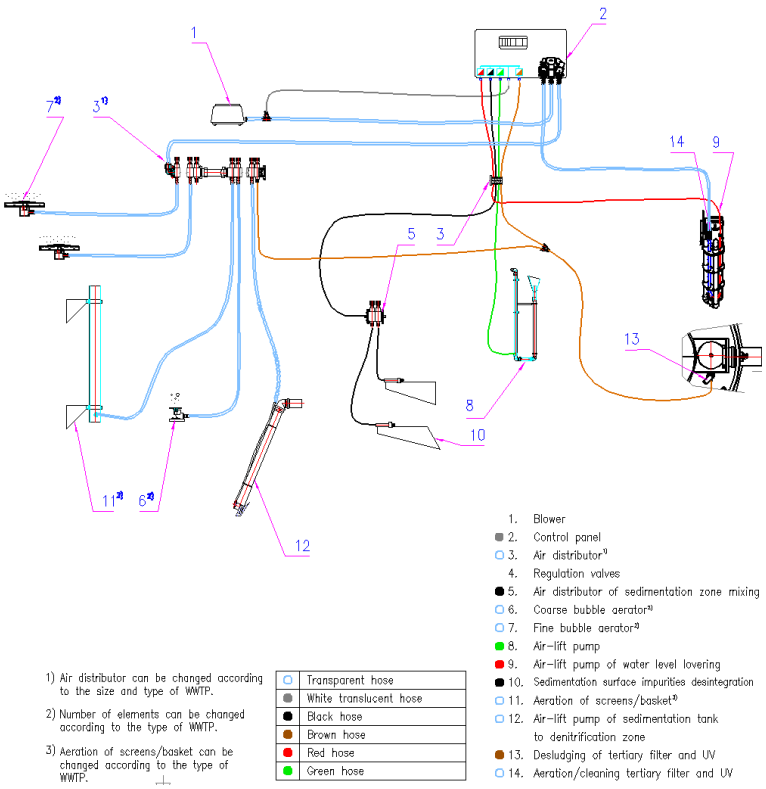

Fig. 25: WWTP EXCLUSIVE UV Air distribution scheme (BC 16-50)

15.3 WWTP OPERATION CONTROL

WWTP operation is controlled by the COMFORT PLUS control unit – see Chapter 14.1.

To assure high efficiency of UV lamp it is necessary to check UV lamp for cleanliness once a month (or depending on the WWTP operation load) and if necessary wipe off – wash the impurities with water.

Before removing UV lamp from the protective cover it is of utmost importance to put UV lamp out of operation by its deactivation or putting the main circuit breaker of WWTP control unit to OFF (see Chapter 20.8).

The expected life of UV lamps is 1 year. In case the UV lamp will be used for prolonged period of time the UV lamp's efficiency may be significantly reduced. This results in compromised microbiological survey at the outlet from WWTP. We recommend that UV lamp is replaced after 1 year of permanent operation.

The switchboard contains the electrical parts necessary for UV lamp's powering and operation. The switchboard accommodates the circuit breaker for the equipment activation / deactivation and the guard current relay that initiates acoustic alarm in case of UV lamp failure.

UV lamp's operation and maintenance are described in Chapter 20.8.

Always use the original spare parts supplied by ENVI-PUR, s. r. o. or by the authorized person for replacement.

16 WWTP DUO

The WWTP structure consists of the two interconnected tanks. The first tank – PRIM - is used for primary sedimentation of the settleable impurities and floating substances from waste waters and it simultaneously serves as the tank for accumulation of the primary and secondary sludge. The other tank is represented by the own WWTP tank of COMFORT, EXCLUSIVE or EXCLUSIVE UV type.

Waste water flows into the PRIM tank where waste water is pretreated. This tank is used as a primary sedimentation of coarse impurities that drop to the tank bottom. The floating impurities (e.g. fats) are trapped here as well. The water deprived of coarse impurities flows through a gravity overflow into the biologic reactor (the actual WWTP tank).

The air lift pump for withdrawal of floating impurities from the secondary settling tank and the sludging air lift pump from the aeration system are introduced into the primary sedimentation tank. Thus, the tank is used as the accumulation reservoir for the excessive sludge.

The layout of the actual WWTP tank is similar as that in the COMFORT type. Only the trash rack basket is not placed at the inlet because it is useless (impurities are trapped in the PRIM tank). The gravity inlet from the primary sedimentation is equipped with a serrated down flow baffle.

The WWTP operation is controlled by the COMFORT PLUS control unit.

The basic accessories of the DUO type WWTP also includes the set for precipitation of excessive phosphorus.

The WWTP layout is depicted on the figure below.

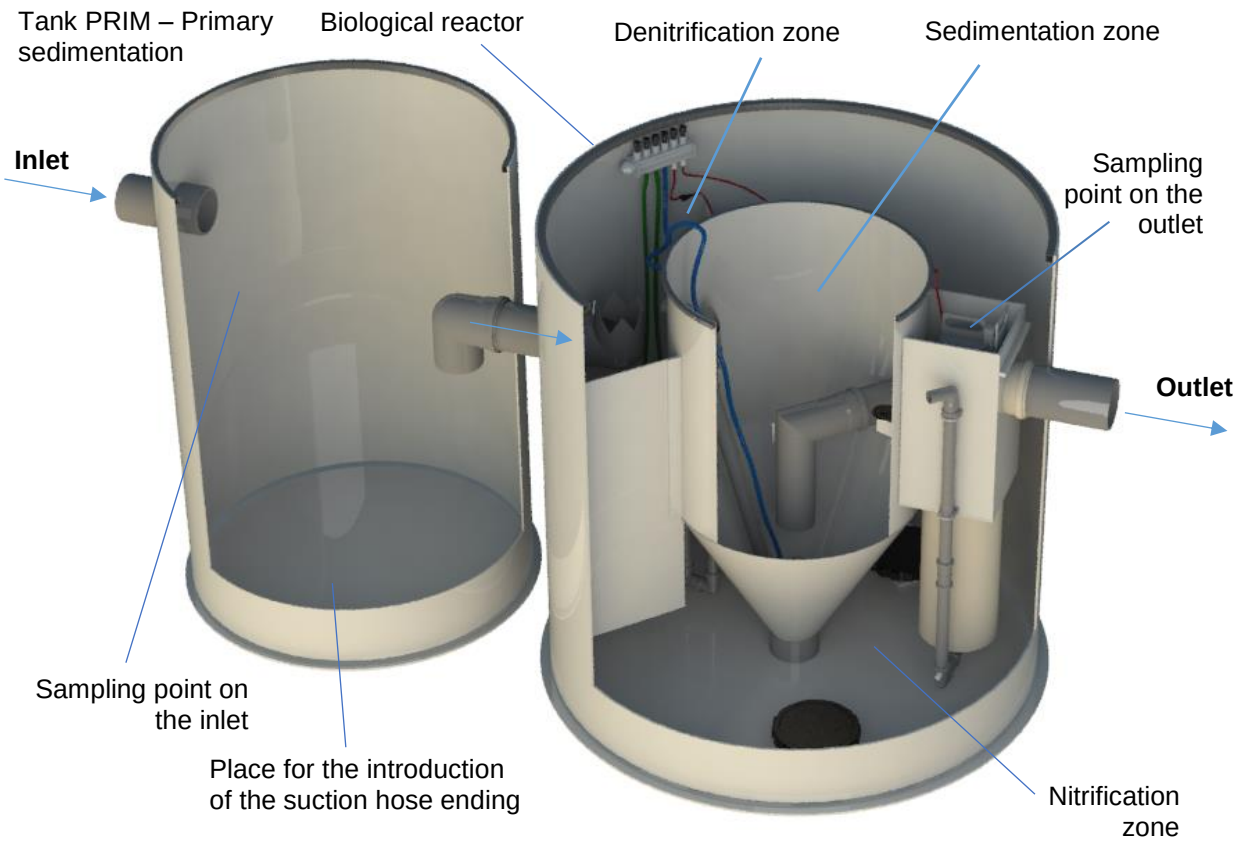

Fig. 26: WWTP DUO

16.1 AIR DISTRIBUTION

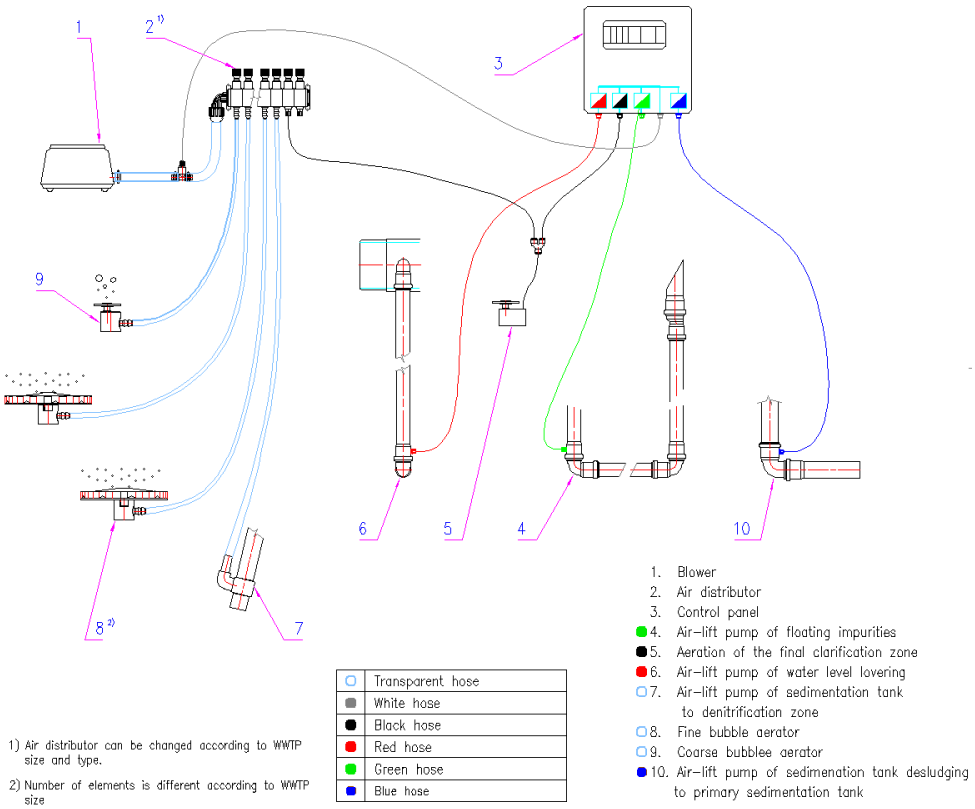

Fig. 27: WWTP COMFORT DUO Air distribution scheme (BC 4-12)

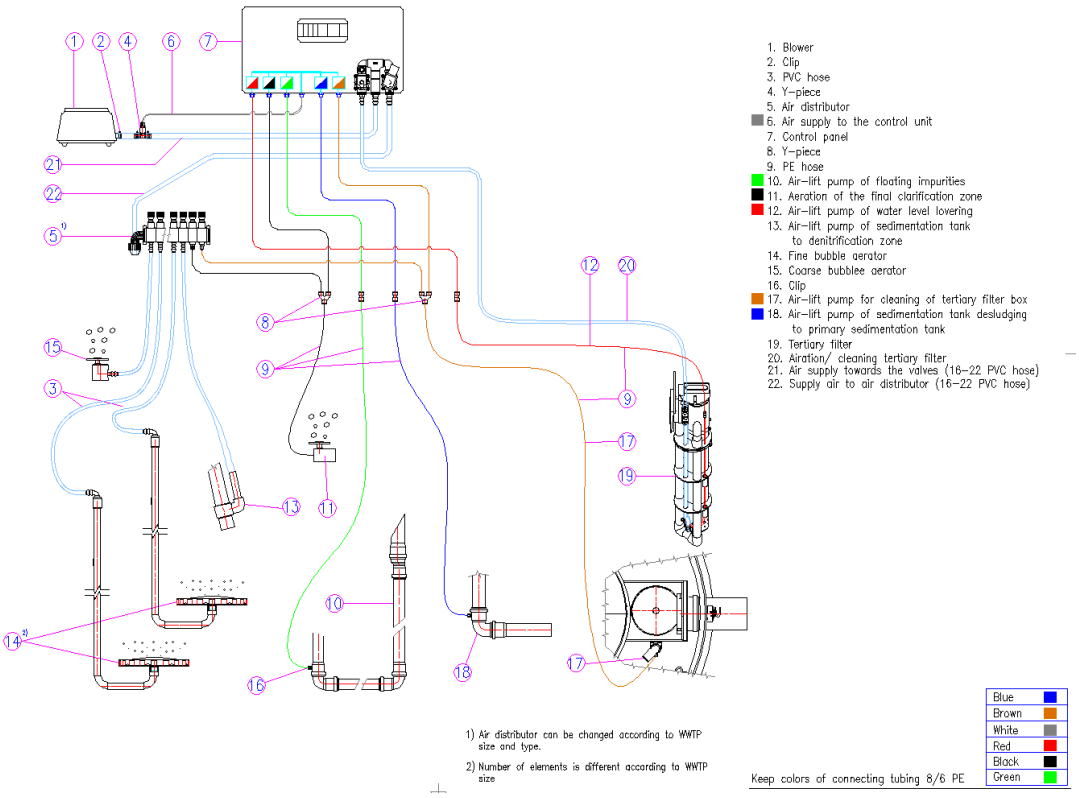

Fig. 28: WWTP EXCLUSIVE / EXCLUSIVE UV DUO Air distribution scheme (BC 4-12)

16.2 WWTP OPERATION CONTROLL

While putting the waste water treatment plant into operation, the presupposed optimum setting of the blower operation was done. Avoid changing this setting wilfully without prior consultation with the authorized dealer or manufacturer because improper setting may cause malfunction of WWTP.

WWTP operation is assured by the intermittent blower operation that is controlled by the control unit. The control unit type depends on the WWTP type that is used as the biological reactor.

The CU control and air distribution connection - see the chapters with the description of WWTP used as biological reactor (COMFORT, EXCLUSIVE, EXCLUSIVE UV).

The switchboard with control unit has either the socket to connect pump (to pump off the sludge by pump) or the output to attach the air hose to the air lift pump used for pumping off.

16.2.1 Setting Mode

The modified COMFORT Plus ¤) control unit (preparation for the pump) is supplied complete with the WWTP with sediment trap. This control unit has a functionality extended either by the pump control or by the air lift pumps to pump off excessive sludge.
Setting is done using the buttons on the control unit panel by selecting relevant mode and parameter. The selected mode and parameters are shown on the display. The parameter to be changed is flashing.

Proceed to the P11 pumping mode (excessive sludge pump)

- Time setting of the pump operation via Menu **P11** by switching RE2 relay.
- The switching time can be set in seconds from **2** to **300** seconds (the setting step is 2 seconds) and the repeating period in hours ranges from **6** to **168** hours. (the setting step is 2 hours).
- Before the pumping is initiated, WWTP is brought to the standstill mode for a period of 30 minutes.
- use the **MODE** and **ARROW** buttons to select the **P11** mode and confirm by pressing **SET** button. The mode is displayed on the display together with the actually set pumping time (in seconds) and with the actual pumping switching dwell time (in hours).
- After the mode has been selected and confirmed, parameters can be changed using the buttons with ARROW up and down. After the required parameter has been selected, confirm by pressing **SET** button and return to the **MODE** selection by pressing **SET** button repeatedly.
- You can continue by selecting another mode by pressing the **ARROW** buttons or cease setting - after 30 s the unit will automatically enter the Control mode.

17 CONTAINERIZED WWTP

If requested, the WWTP technology can be housed in the tank of rectangular shape. The material used for the tank can be polypropylene (PP), stainless steel (SL) or concrete (B). The layout of individual parts and technological elements of WWTP is depicted in Figures 29 and 32.

Depending on the WWTP technology control type the container WWTP can be of OPTIMA, COMFORT, EXCLUSIVE or EXCLUSIVE UV type. Description of how to control individual types is given in the previous chapters.

17.1 WWTP OPTIMA

The OPTIMA type WWTP is fitted with an air lift pump for a withdrawal of floating impurities (the manual operation only) and with a down flow baffle on the outlet pipe. Individual technological parts of WWTP are detailed in the figure below.

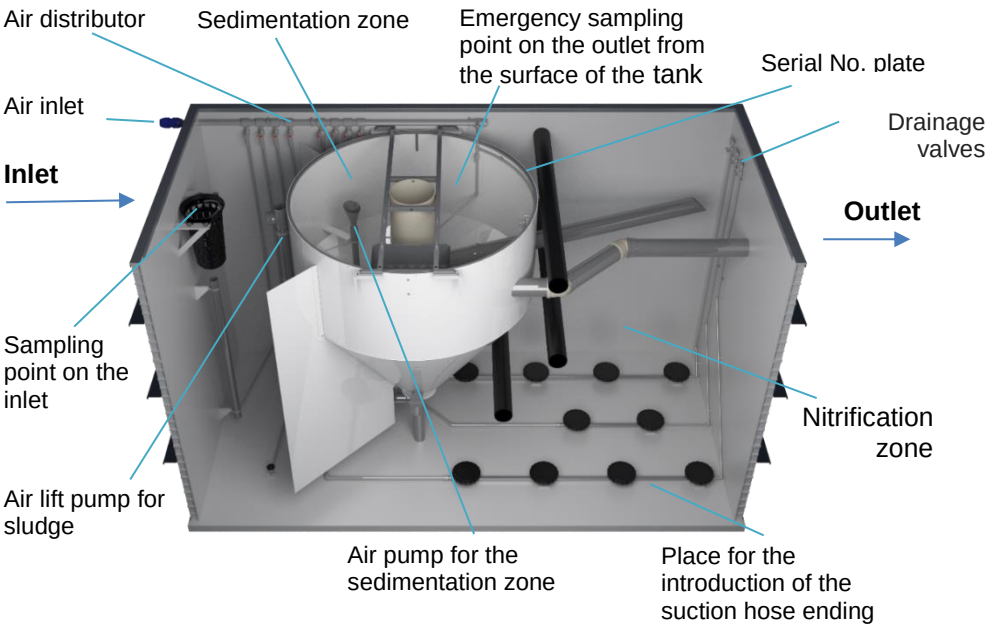

Fig. 29: WWTP OPTIMA in PP container

17.1.1 WWTP Operation Control

WWTP operation is assured by the intermittent blower operation. The intermittent blower operation is ensured by the time relay (see Chapter 12.1.) or a simple "OPTIMA“ control unit with 10 preset programs (see Chapter 12.2.).

17.1.2 Air distribution

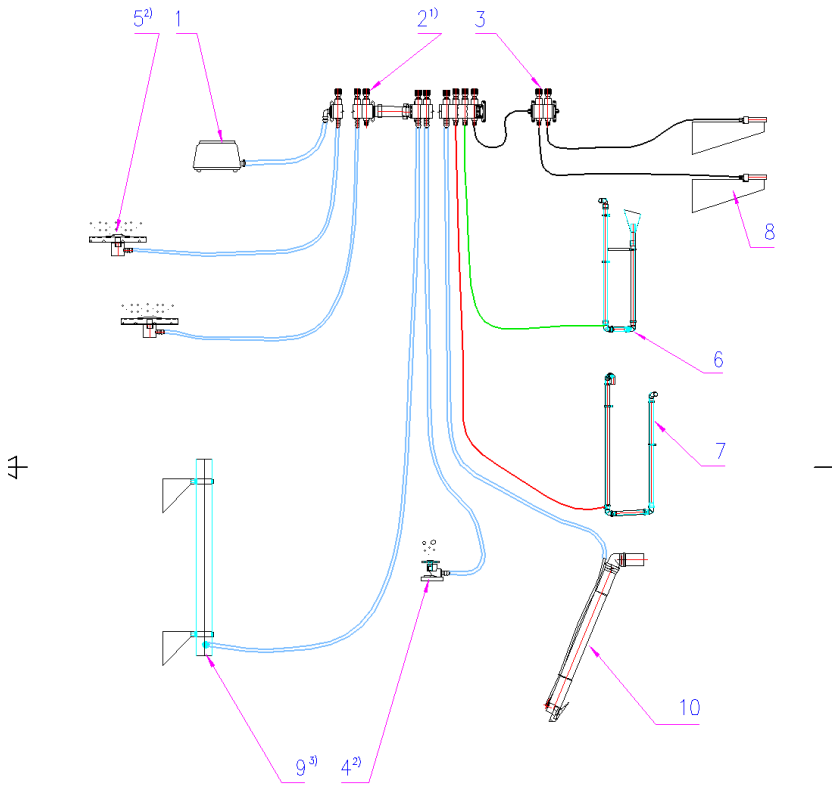

1) Air distributor can be changed according to the size and type of WWTP.

2) Number of elements can be changed according to the type of WWTP.

3) Aeration of screens/basket can be changed according to the type of WWTP.

○	Transparent hose
●	Black hose
●	Red hose
●	Green hose

1. Blower
○ 2. Air distributor[1)]
● 3. Air distributor of sedimentation zone mixing
○ 4. Coarse bubble aerator[2)]
○ 5. Fine bubble aerator[2)]
● 6. Air-lift pump
● 7. Air-lift pump of water level lovering
● 8. Sedimentation surface impurities desintegration
○ 9. Aeration of screens/basket[3)]
○ 10. Air-lift pump of sedimentation tank to denitrification zone

Fig. 30: WWTP OPTIMA Air distribution scheme (BC 20K, 25K, 40K, 50K)

17.2 WWTP COMFORT

17.2.1 WWTP Operation Control

The WWTP technology is extra equipped with the automatic level reduction in the secondary settling tank and the consequent withdrawal of floating impurities by the air lift pump. The operation is controlled by the BCC control unit (see Chapter 13.1.1) or COMFORT Plus control unit (see Chapter 14.1.1). ¤) Individual technological parts of WWTP are detailed in the figure below.

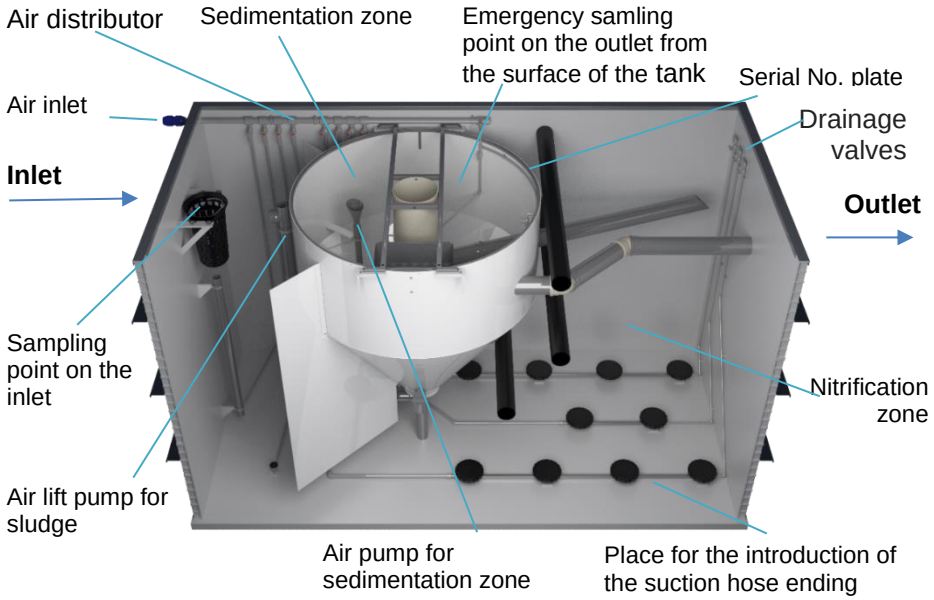

Fig. 31: WWTP COMFORT in PP container

17.2.2 Air distribution

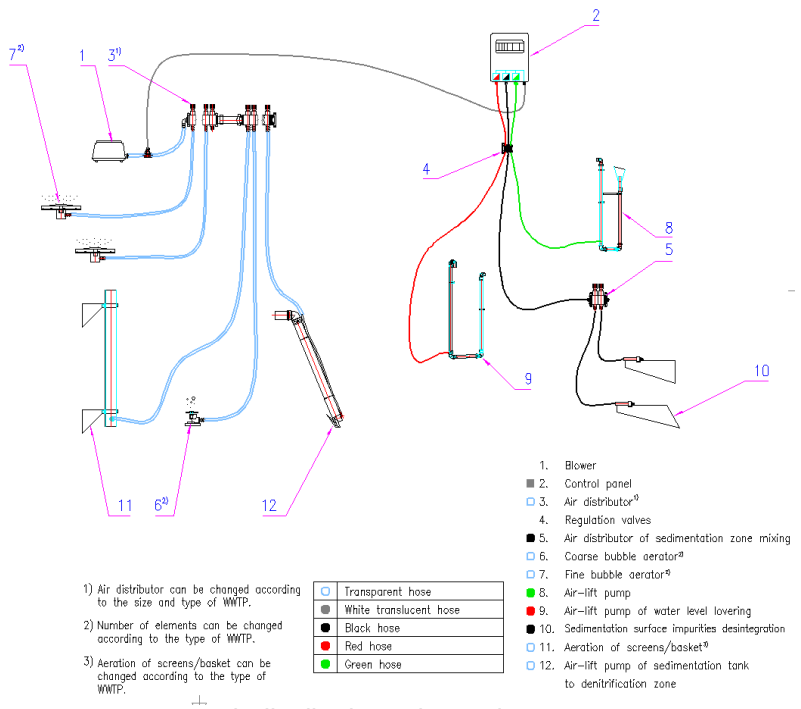

Fig. 32: WWTP COMFORT Air distribution scheme (BC 20K, 25K, 30K, 40K, 50K)

17.3 WWTP EXCLUSIVE/EXCLUSIVE UV

This WWTP type is extra equipped with the tertiary final treatment at the outlet and with the set for precipitation of excessive phosphorus. Mechanical tertiary filter improves catchment of possible impurities escaped from the secondary settling tank. The filter is fitted in a separate structure on the outlet pipe and it is gravity flown.
The filter is composed of the plastic supporting structure with a mesh of 0.5 mm in size. Impurities caught on the filter are automatically shaken off into the container the volume of which is consequently pumped off in automatic manner by the air lift pump back into the aeration system.
The EXCLUSIVE UV variant contains one extra UV lamp.

17.3.1 WWTP Operation Control

The operation is controlled by the COMFORT Plus control unit (see Chapter 14.1.1 ¤)).

Individual technological parts of WWTP are detailed in the figure below.

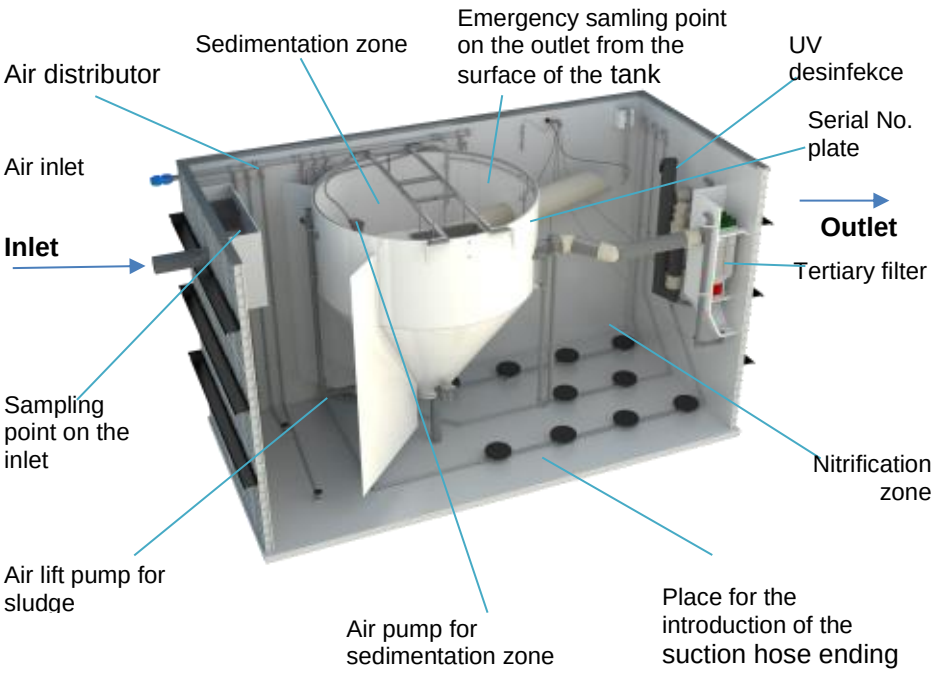

Fig. 33: WWTP EXCLUSIVE, EXCLUSIVE UV in PP container

17.3.2 Air distribution

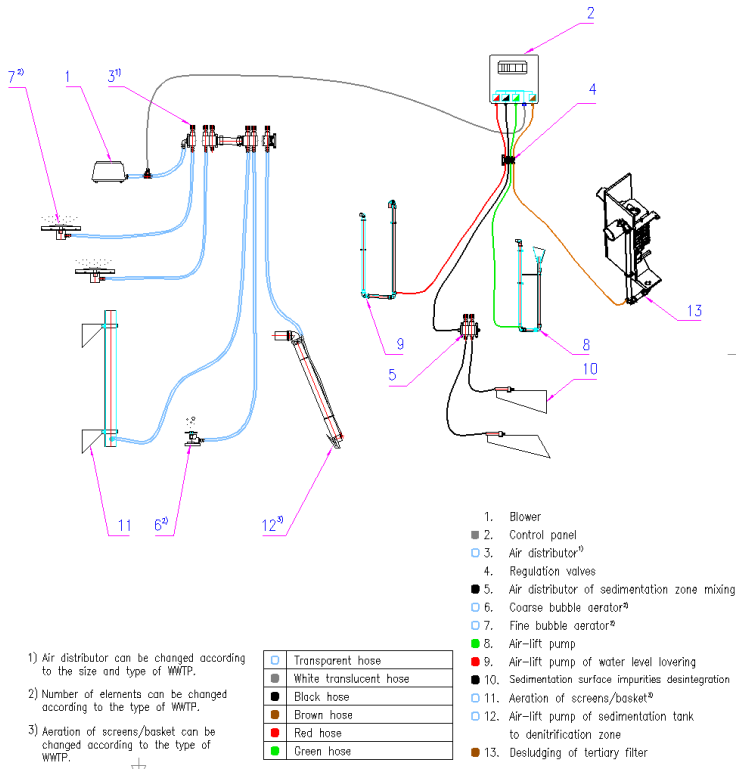

Fig. 34: WWTP EXCLUSIVE Air distribution scheme (BC 20K, 25K, 30K, 40K, 50K)

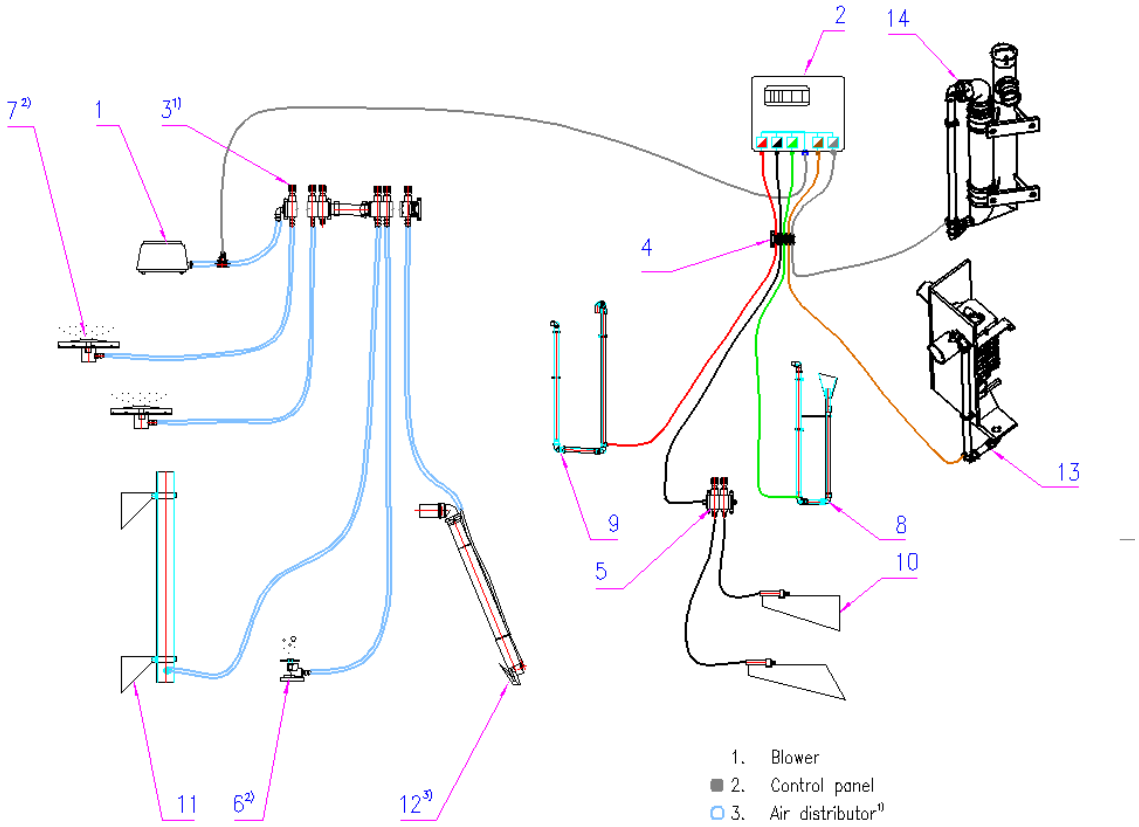

1. Blower
2. Control panel
3. Air distributor 1)
4. Regulation valves
5. Air distributor of sedimentation zone mixing
6. Coarse bubble aerator 2)
7. Fine bubble aerator 2)
8. Air–lift pump
9. Air–lift pump of water level lovering
10. Sedimentation surface impurities desintegration
11. Aeration of screens/basket 3)
12. Air–lift pump of sedimentation tank to denitrification zone
13. Desludging of tertiary filter
14. Desludging of UV

1) Air distributor can be changed according to the size and type of WWTP.

2) Number of elements can be changed according to the type of WWTP.

3) Aeration of screens/basket can be changed according to the type of WWTP.

○	Transparent hose
●	White translucent hose
●	Black hose
●	Brown hose
●	Red hose
●	Green hose

Fig. 35: WWTP EXCLUSIVE UV Air distribution scheme (BC 20K, 25K, 30K, 40K, 50K)

18 DOSING EQUIPMENT FOR CHEMICAL PRECIPITATION OF PHOSPHORUS

BE CAREFUL IF YOU USE THE FLOCCULANT PAX, WEAR PERSONAL PROTECTIVE EQUIPMENT AND FOLLOW ALL THE WORK SAFETY RULES!!! FLOCCULANT PAX IS A STRONG CAUSTIC! FOLLOW THE INSTRUCTIONS IN SAFETY DATA SHEET.

18.1 DESCRIPTION

Excess phosphorus, which can not be removed biologically, is coagulated chemically by dosing the concentrated solution of liquid Flocculant PAX.

18.2 PACKAGING, STORING

18.2.1 Packaging

1		Peristaltic dosing pump with accessories (accessories - suction hose 4x6 (2 m), discharge hose 4x6 (2 m), suction basket, and injection valve)
2		Digital time switch
3		Reservoir canister with liquid Flocculant PAX (13 kg)
4		Interception vat
5		Discharge hose (10 m)

Peristaltic pump has a maximum output of 1.0 l/h (depending on the distance of installation from WWTP), power input 3.5 W, 230 V. The standard pump accessories are composed of the suction basket and injection valve, suction hose 4x6 (2 m), discharge hose 4x6 (2 m).

Flocculant PAX is supplied in 13 kg canisters.

To ensure the equipment functions correct, use exclusively Flocculant PAX approved by the manufacturer!

Interception vat prevents the solution of Flocculant PAX from leaking into the environment should the canister is damaged.

18.2.2 Storing

Store flokulant PAX in original packaging only. Limited shelf life 6 months.

18.3 LOCATION AND INSTALLATION OF THE DOSING EQUIPMENT

18.3.1 Location

We recommend to locate the dosing equipment into the area protected against the weather influences. Dosing pump should not be placed at a maximum distance of 10 meters from WWTP.

18.3.1.1 External location

We recommend to locate it in the wooden ENVI-PUR house.

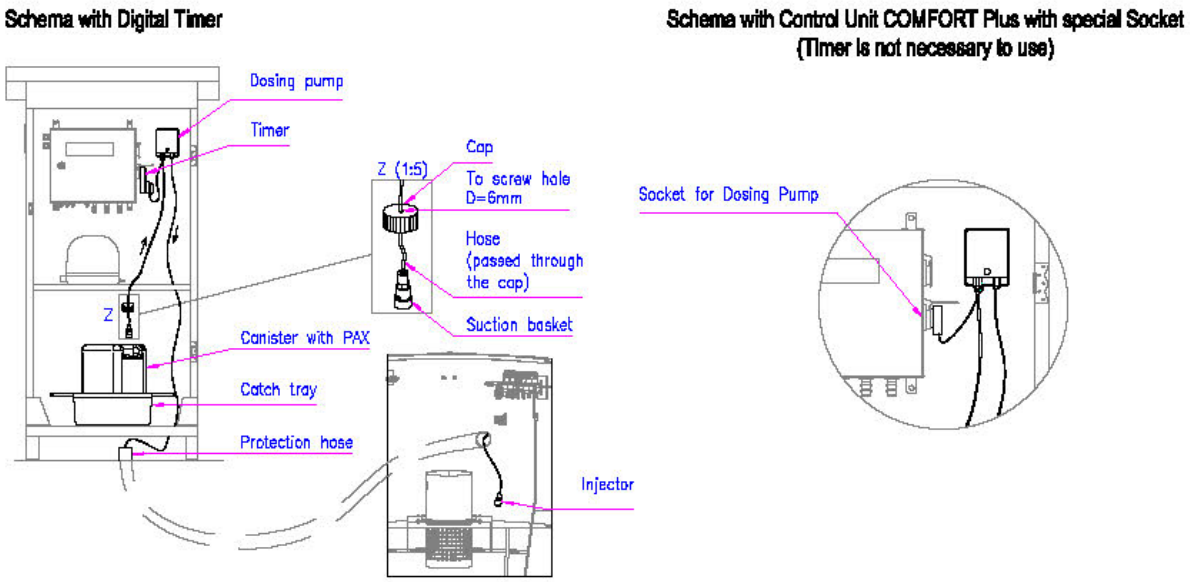

Fig. 36: Wooden house ENVI-PUR

18.3.1.2 Internal location

Location in the garage, cellar or other suitable interior near the control unit or the blower of the BIO CLEANER® WWTP.

18.3.2 Installation

1) Follow the peristaltic pump manual to mount the pump to the wall.
2) Place the interception vat under the pump (or close to it).
3) Place the canister with Flocculant PAX into the interception vat.
4) Remove the lid of the canister with Flocculant PAX to drill the ø6mm hole into the lid.
5) Push the suction hose through the hole drilled into the lid.
6) Assemble the hoses by following the manual attached to the pump. Connect suction basket to the suction hose and immerse the basket into canister. Discharge hose must be pushed through the protector together with the air hose from the blower to WWTP. Then, the end of discharge hose is fitted with **injection valve** to be **mounted above the nitrification (aerated) part's level** in WWTP. The injection valve is not immersed, Flocculant PAX is dosed into the free nitrification level. It is mixed owing to the installed locking element.

Suction basket *Injection valve*

7) Follow the dosing instructions to adjust the pump operation on the digital timer switch. If WWTP is equipped with the ComfortPlus control unit with the socket for dosing pump it is possible to adjust dosing on the control unit that will assume function of the digital time switch.
   The necessary amount of Flocculant PAX is within the order of millilitres. Because it is very low quantity the dosing pump operation must be time controlled. The least time unit to be set on the digital time switch is 1 minute.
8) Connect the pump to the socket on the digital time switch that needs to be connected to the power socket.
   In the ComfortPlus control unit with the dosing pump socket, connect the pump directly to this socket. In this case, the digital time switch is not used.

18.4 DOSING

BE CAREFUL IF YOU USE THE FLOCCULANT PAX, WEAR PERSONAL PROTECTIVE EQUIPMENT AND FOLLOW ALL THE WORK SAFETY RULES!!! CONCENTRATED FLOCCULANT PAX IS A STRONG CAUSTIC!!!

The table below specifies the daily doses of Flocculant PAX to obtain the resultant phosphorus concentration at the outlet from WWTP of about 3 mg/l. The calculation considered the input phosphorus concentration of 17 mg/l (80 % efficiency in the phosphorus removal). The actual necessary dose can be higher or lower depending on the input phosphorus concentration.
We recommend to set the initial dose lower to consequently correct the dosed amount depending on the analysis results. The dose should be uniformly distributed throughout the entire day.
Never dose a larger amount into WWTP than necessary! Increased doses of PAX flocculant may reduce improperly pH in WWTP that would result in the inhibition of the treatment processes. Increasing dose goes hand in hand with increased generation of sludge (inorganic ballast) and the need to sludge WWTP more frequently.

PE	Water amount (m^3/d)	Dose of PAX (l/d)
4	0,6	0,064
6	0,9	0,096
8	1,2	0,128
10	1,5	0,160
12	1,8	0,192

16	2,4	0,256
20	3,0	0,320
25	3,75	0,400
30	4,5	0,480
40	6,0	0,640
50	7,5	0,800

Peristaltic pump has a maximum output of 1.0 l/h depending on the distance of installation from WWTP. After the dosing pump has been activated the actual dosed amount of Flocculant PAX into WWTP must be measured. The necessary dosing interval per day must be set based on this measuring. Ex.: The most frequent setting of the pump operation for BC 4 with the timer will be 2x–4x per day for a period of 1 minute. In the ComfortPlus control unit, the required interval must be selected according to the table in the manual.

18.5 OPERATION AND MAINTENANCE

18.5.1 Checking the amount of Flocculant PAX

Visual inspection - once a month:

- checking the amount of Flocculant PAX in the canister.
- The canister content should suffice for 2-5 months of operation depending on WWTP size and loading.
- checking the canister for tightness
- checking the interception vat for possible presence of Flocculant PAX

To ensure the correct function of the equipment, the flocculant recommended by Envi-Pur s.r.o. must be used exclusively. !

18.5.2 Dosing pump operation

The operation requires special measures and attention as to the medium to be dosed.
- When in operation, check is made of the dosing of Flocculant PAX into the point of introduction into WWTP

- **Make visual check** once a month for :
  - dosing hose tightness
  - impurities in the dosing hose and suction basket
- **Periodic maintenance**
  - after 4-6 months, lubrication of the silicone hose in the dosing pump with a silicone-based gel
  - replacement of the hose after 1-2 years (the spare hose can be ordered from the WWTP manufacturer)

Stopping the dosing equipment

The dosing pump is equipped with the switch used to stop the pump. Further, the pump can be disconnected from the electric energy.

The pump must be OFF when WWTP is being shut down !

18.6 OCCUPATIONAL SAFETY AND HEALTH AT WORK WITH COAGULANT

The aqueous solution of Flocculant PAX is used as a coagulant. Chemical composition is specified in the Safety Data Sheet that is supplied as the annex to the supplied medium.

All the occupational measures for the work with caustic chemicals must be adhered to. In case of contact with the skin the afflicted place must be rinsed with sufficient stream of a pure, potable water and washed with soap. After eye contact immediately start rinsing with a stream of cold water and seek medical help in no time. Use the nearest drinking water reservoir. If swallowed do not induce vomiting and seek medical help in no time. All the vessels that contain coagulant must be visibly marked with relevant pictogram for caustic chemicals. They must NOT be confused with the packages for food and beverages! When working near the atomizing nozzles at the dosing points and during the dosing pump assembly and disassembly the inflow from the reservoir tank must be stopped and the warning table - Work in progress on the equipment - No starting! - must be posted on the equipment and its controls

18.7 MINIMUM PROTECTIVE EQUIPMENT FOR COAGULANT HANDLING

- Rubber gloves,
- protective glases,
- firm footwear.

19 STARTING-UP OF THE WWTP

Cleaning sewage water is a biological process and is dependent besides others on the reproduction of microorganisms. On that ground the required standard of cleaning is reached after some time of regular operating of the WWTP with the projected loading. The time from putting into operation to reaching the full cleaning effectiveness lasts approx.

3 to 8 weeks and is dependent on the quality and temperature of sewage water at inlet. This period is expertly called “the ripening period”. In the ripening period the setting, operation time (the C1 phase) and the stopping time (the C2 phase) differ from the regular WWTP´s operation. In the ripening period, larger amount of air must be supplied into WWTP than during the common operation. **We recommend the authorized dealer or manufacturer to achieve this activity.**

If the water has to be cleaned at the level specified in the operating rules, it is necessary to start-up a biological process. There are two ways to incorporate of biological process:

- Progressive start-up, i.e. inflow of waste water and permanent loading, even above the specified technological parameters.
- By import of activated sludge, also called inoculum, from other biological WWTP.

IN BOTH CASES IT IS NECESSARY THAT ALL ELEMENTS OF AERATION SYSTEM TO BE OPENED IN RIGHT POSITION (SEE CHAPTER 9.1, 9.2, 10.2). Aeration system, air-lift pump of return sludge and aeration of screen basket/denitrification zone have to be in operation.

Training mode has been set up when putting the WWTP into service. In case of repeated launching (e.g. after a long-time weaning from permanent operation) it must be set up repeatedly.

Mixture of activated sludge is created in WWTP by gradual incorporation – bacteria, which are in WWTP from intestinal tract of people. They multiply gradually in waste water.

When ripening WWTP with inoculum sludge it is important to select the activated sludge from different WWTP that functions correctly. The sludge must sediment in correct manner. In the process of inoculation, it is convenient to apply such an amount of a return sludge that corresponds to about ¼ of the volume of your WWTP.

When inoculating WWTP with BC 4 and 6, about 50 – 150 l of the return sludge will suffice.

WWTP is ripened if the sedimentation test result given about 25 – 30 % of a sludge.

After ripening, it is necessary to set the operation time and the blower operation interruption according to the actual substance load and hydraulic load acquired from the long-term monitoring of the WWTP operation. We recommend that this action is carried out by the authorized person or manufacturer.

20 OPERATION AND MAINTENANCE

21 GENERAL

Operation and maintenance of the WWTP is not time consuming or technically demanding, but it is the basic condition for the right function of the WWTP.

- **To do all the activities which are further described carefully.**
- **If not sure about any process or activities contact ENVI-PUR, s. r. o. or an authorized dealer.**

21.1 UTILITIES/GADGETS

For carrying out the maintenance correctly and easily, you need the following items:

- Rubber gloves,
- perforated scoop,
- long brush,
- measuring cylinder (1 L),
- pH papers,
- shovel,
- scoop for the activated sludge.

21.2 START-UP AND SHUT DOWN OF THE WWTP

The **BASIC** variant - turning on (off) is performed by connecting (disconnecting) of the blower supply cable fork into (from) the timer socket inserted into the installation socket to supply electrical energy to WWTP.

The **OPTIMA** variant - turning on (off) is performed by connecting (disconnecting) of the control unit's supply cable fork into (from) the installation socket to supply electrical energy to WWTP.

The **COMFORT** variant - turning on (off) is done using the circuit breaker in the electric box.

21.3 SUMMARY OF ACTIVITIES PERFORMED DURING OPERATION AND MAINTENANCE

The summary of individual performed activities is given in the following table:

interval					activity	
day	**week**	**month**	**half a year**	**other**	**name**	**procedure**
x					daily inspection	20.5.1
	x				weekly inspection	20.5.2
	x				pH measuring	20.5.3
		x			sludge concentration measuring	0
			x	as required	sludge pumping off	20.5.5
				as required	waste water sampling	20.5.6
		x		as required	check, if necessary - tertiary filter cleaning (this applies for the case that WWTP is fitted with the tertiary filter)	20.7
		x		as required	check, if necessary - UV lamp cleaning (this applies for the case that WWTP is fitted with the UV lamp)	20.8
				1-2 years	Blower revision, if necessary replace filter and membranes, replacement of UV lamp after 1 year (this applies for the case that WWTP is fitted with the UV lamp)	See the Blower Operation and Maintenance Manual

21.4 DESCRIPTION OF ACTIVITIES PERFORMED DURING OPERATION AND MAINTENANCE

21.4.1 Daily Inspection

Within the daily inspection it is necessary to verify if WWTP is in operation and if any fault of the electrical equipment is present or not. The inspection does not require opening of the BIO CLEANER® reactor - this is done in the room where blower is situated.

During inspection, verify:

- Connection of the blower into socket,
- activation of the circuit breaker on the electrical cabinet *****,
- activation of the membrane blower in Phase C1,
- possible occurrence of a fault message *****,
- whether or not the blower noise or temperature increased significantly,
- sufficient supply of the precipitation solution and the canister tightness,
- check of a pressure loss on the blower filter (if the EFFEPIZETA type blower is installed) ¤).

(* this applies for the COMFORT, EXCLUSIVE, EXCLUSIVE UV variant)

If any fault occurs, proceed according to Chapter 21.

21.4.2 Weekly inspection

Within the weekly control it is necessary to verify visually the WWTP function and eventually to clean some parts. During the control, the cover of reactor BIO CLEANER® must be removed.

Within the control, the following parts of the WWTP must be checked:

A. <u>Basket for catching the coarse mechanical dirt</u>

The basket catches mechanic junk and rushes paper and biologically reducible substance with the help of air led below the basket into the denitrifying zone. It is necessary to check, whether the basket is not full and whether it's aerating is working well.

- Wait until the WWTP passes on to phase C1 when the blower is on.
- Check whether distinct bubbles of air go through the basket. If not, intensify **mildly** the flow of air below the basket by rotating the corresponding valve on the air distributor.
- In case, there are larger pieces of biologically irreducible substance (such as plastic, elastic, textile) in the basket or if the water level in the basket is higher than the water level in the denitrification zone, clean the basket.

While the basket is being cleaned, ensure that sewage water is not supplied into the WWTP (do not use appliances connected to the sewerage leading into the WWTP)

While cleaning the basket, follow these steps:

- Draw the basket out of the guide way and take out of the tank,
- Empty the content of the basket (further only rakings) into the prepared vessel,
- In case of need, clean the caught dirt mechanically,
- Draw the basket back into the guide way.

Sprinkle rakings with bleaching powder or any other similar disinfectant and put them into a municipal waste vessel.

B. Air-lift pump for return sludge

The airlift pump pumps the activated sludge of the secondary settling zone. It is necessary to check if it has not been blocked.

- Wait until the WWTP passes on to phase C1 when the blower is on.
- Check whether there is water flowing out of the air-lift pump of the return sludge in the denitrification zone, stream of water is uniformed and doesn´t squirt on the basket for catching mechanical dirt.
- If not, follow chapter 21.

Operation of air-lift pump for return sludge implicates right operation of WWTP. Air-lift pump has to pump at all times, if the blower is on.

Spout of air-lift pump mustn´t be blocked and clogged.

C. Secondary settling zone

There should not be larger pieces or a layer of dirt on the water level of the secondary settling zone. Water should be transparent and clear and below the water level boundary line of clear water and sludge should be seen. In the drain canal, larger amount of floating dirt should not be caught.

- Check the cleanliness of the drain canal in the secondary settling zone and if larger amount of dirt appears, clean it with a scoop and move to the dirt to the denitrification zone.
- Check purity of water in the secondary settling zone and formation of the water-sludge interface. Water should be transparent and clear and below the water level boundary line of clear water and sludge should be seen. If not, follow chapter 21.
- Check the cleanliness of the drain canal and if dirt appears, clean it with a scoop and move to the dirt to the denitrification zone. If larger and regular dirt appears, follow chapter 21.
- In case the situation repeats periodically, try for variant **COMFORT, EXCLUSIVE, EXCLUSIVE UV** using the cleaning of secondary settling zone function instead of picking the dirt from the water level manually. Act in the following way during the testing the cleaning function:
  - Start cleaning (mode START) in set up mode,
  - watch if the water level in the tank drops during phase C3,
  - watch if the content of the zone mixes and if the dirt on the water level is pumped during phase C4,
  - watch if the dirt comes out on the water level after finishing phase C5,
  - watch if the dirt is pumped of the water level during phase C6.

D. Nitrification zone

Activation zone should be aerated equally.

- Wait until the WWTP passes on to phase C1 when the blower is on
- Check whether equally divided air bubbles are to be seen on the water level of the nitrification zone. If not, follow chapter 21.
  - It is appropriate to open drain valves at aeration grids in container WWTP every week to drain any condensate. If the condensate doesn´t drain, efficiency of aeration will get down.
- check the injection valve of the coagulant dosing hose (PAX) to see if the solution is dosed correctly when the feeding pump is in operation and if the solution flows through spontaneously when the feeding pump is stopped. If not, proceed as instructed in chapter 21. The check the injection valve for any impurities (sludge) and if so, remove them.

E. General condition of WWTP

Check whether an event that did not arise earlier or which you find unusual has not been found. If not, follow chapter 21.

21.4.3 pH measuring

It's strongly recommended to measure pH once a week at least with indicator papers. Do the measurement from a specimen of the water which is in the nitrification zone. The pH value should be around the neutral point. The activated sludge can be adapted to pH 6.5 – 9.0.

The pollution in the activation nitrification zone releases hydrogen ions, which reduce the alkalinity of the waste water. The lack of alkalinity can lead to a spontaneous decrease in nitrification at pH values that inhibit the process. The current inflow of sewage water treatment plant is in the inlet area of a partial increase in alkalinity and thus to compensate the possible decrease in pH during nitrification.

pH-value can be dramatically and suddenly reduced with bad dosing of PAX or spontaneous escape of solution through damaged injector or broken hose with solution. In this case it is necessary to make good immediately (change of valve or hose, change set up of dosing) and increase pH according to the following procedure. During handling with solution of PAX, please observe the safety instructions!
The inflow of wastewater with low buffering capacity (mostly in the use of "soft" water, water treatment ion exchange resins, rain water), wastewater containing high ammonia or low ratio of C: N, or in the proportion of industrial wastewater treatment plant on Low pH may be a breach of this balance. Can serve as an indicator of muddy runoff from sewage plants and the implementation of the supernatant sedimentation test (sludge is in the form of tiny flakes, which do not settle). If the detected pH value below 6.5 is necessary to initiate dosing alkalinizing chemicals (lime) by activating the nitrification zone. Instructions for this procedure are shown below. If you are not sure, so this problem is advised to consult the vendor or manufacturer WWTP.
Instructions to adapt pH:

Aids:
a bag with slaked lime, scoop, pH indicator papers (or the pH meter).

Procedure:
Use the indicator paper to indicate pH in WWTP (measured in the aerated nitrification zone). In case pH lower than 6.5 is indicated scatter a scoop of slaked lime over the water level of the **aerated part**. Measure pH again after half an hour operation of WWTP. If the pH value ranges within 7.5 -8.0 the dosing can be terminated, if the pH value is outside of this range, proceed analogically until you reach pH of 7.5-8.0. The pH value in WWTP **must not exceed the value of 8.5**!
Measure pH in WWTP gradually in the interval of one or two days (depending on the rate of pH drop) until the moment when pH about 6.5 is reached. Consequently, perform neutralization to pH 7.5 - 8.0. The further procedure covers dosing of the half a dose of lime than required to obtain pH 7.5 - 8.0 in the half interval than the time identified during the pH drop from pH 7.5-8.0 to the pH value below 6.5.
To achieve the required pH value check the pH value once in two weeks. If the value is near 7 there is no need for the lime to be dosed. If lower or higher values are identified, increase or decrease slightly the dosed amount of lime. The interval between dosing cannot be extended by increased lime dose!
If the WWTP operator has already found the optimum procedure for lime dosing the operator needs not dose the lime on the WWTP water level but anywhere into the sewerage system upstream of WWTP providing a sufficient flow of waste water through this part is ensured.
In principle, different alkaline agents as, for example, sodium hydroxide, can be used to neutralize WWTP.
However, application of strong alkalis entails a risk of overdosing and consequent WWTP collapse. It is therefore necessary to exercise special care and caution when determining suitable dose. It generally applies that the dosed amount is substantially lower than that in the slaked lime and it ranges in the order of single grams and the dosing interval is shorter. The advantage of this procedure is the option of easy dosing directly into toilet, wash basin drain, etc. When using these agents it is necessary to adhere to the occupational safety precautions stated in the package leaflet to the agent.
If the WWTP operation mode is altered (e.g. a long-term change to the load, altered composition of waste water, etc.) it is essential to perform repeatedly the attempt to find the dose and interval for dosing or, if appropriate, interrupt the alkali dosing.

21.4.4 Measuring the Sludge Concentration – SEDIMENTATION TEST

It is necessary for the correct WWTP function that the nitrification zone contains an optimum concentration of microorganisms that cause the actual biological treatment of water (a so called activated sludge).

- wait for C1 operation phase (aeration should be operational for at least 10 minutes),
- draw a water from the nitrification zone into the graduated cylinder or different transparent cylindrical vessel of approximate volume of 1 L,
- leave the cylinder or vessel standing for 30 min on a shady and flat place,
- identify whether or not a clear interface of sludge and clear water is formed. If not, proceed according to Chapter 21.
- measure the sludge height. If the height is larger than about 70 % of the total water level height, perform sludging – see 20.5.5. Ideal sludge height is 30 % - 50 % of the total water level height, the presupposed sludging interval is about 2x a year (depending on the WWTP load, the frequency can be higher or lower).

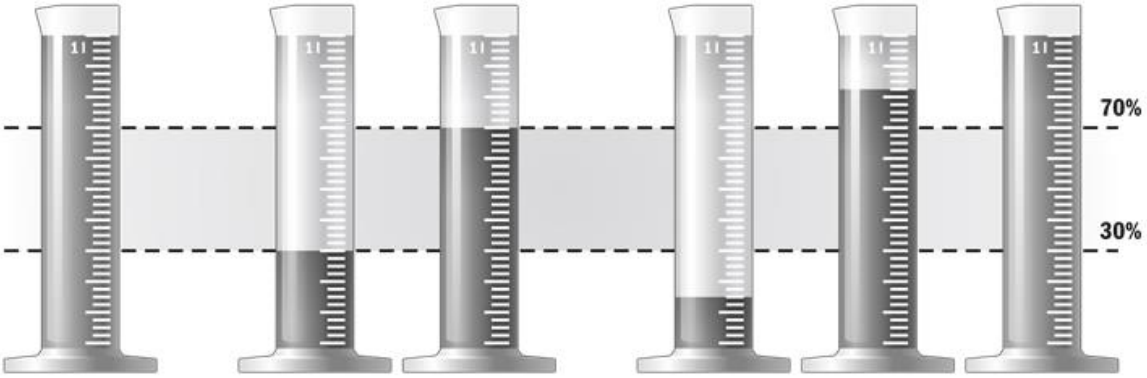

Collected water with sludge (1 liter) | right | low | high | none

Fig. 37: Possible results of the sedimentation test after 30 minutes

21.4.5 Pumping off the sludge

In the course of WWTP operation sludge gathers in the nitrification zone and it must be drained.

Sludge and water pumped of the WWTP is dangerous waste and handling must be done in accordance with legal rules.

In the sludging process, proceed as follows:

- Turn WWTP in C1 mode or connect the blower to the power socket so that the entire aeration volume is mixed uniformly (approximately 1 min).
- Introduce carefully the end of the suction hose of gulley sucker or different pumping technique into the nitrification zone (**beware! aeration elements are mounted on the bottom!**).
- Slowly pump off about 1/5 to 1/2 of the tank volume.
- **In the pumping off process, the water level differences in the nitrification zone and in the secondary settling tank must not be larger than 40 cm, otherwise the secondary settling tank may get damaged.**
- Take out the end of the suction hose of gulley sucker or different pumping technique.
- Activate the waste water treatment plant.

- Right the next day, perform the sedimentation analysis to verify that sufficient amount of sludge was pumped off.
- In case no change took place in the sedimentation analysis repeat the same procedure.

- **While manipulating the hose and the termination be very careful so as not to damage the reactor.**
- **Pour in the drained volume immediately after drainage.**

21.4.5.1 Sludging Procedure for the DUO Type WWTP

We recommend to sludge the PRIM tank once a year. Pump off the tank completely. Only if the ground water level is higher, pump off such an amount of water to ensure the water level in the tank is always higher than the ground water level (if this instruction is ignored there is a risk that the tank gets destroyed or that it floats up).

- **Immediately after the sludging is finished the tank must be filled or topped with a clean water up to the service water level.**
- **The built in tank must not remain empty for prolonged time.**

Perform pumping off in the second tank only in case of need depending on the results of the sedimentation test (see Chapter 20.5.4). We recommend to carry out the sedimentation test every 2 months.
The excessive sludge can be pumped off directly into the foreseated tank of the primary sedimentation. For procedure see Chapter 20.5.5.

21.4.6 Sampling

Taking samples and their following sewage water analysis enable to get information about the function of the WWTP. You may take them for your own use or because it is wanted by an appropriate water utilization authority. It is necessary to have the taken samples analyzed in a laboratory specialized in sewage water analyzing. It is usually enough to set biological oxygen demand in five days (BOD_5), chemical oxygen demand (COD) and suspended substance (SS).

Before taking samples always agree with the lab, which is going to do the analysis, on the number and quantity of taken samples. At the same time, the lab should provide you with water sampling bottles (special bottles) in which you take the samples to the lab and detailed instructions for taking samples.

Samples can be taken with a PVC bottle, which is prepared on about 1.5 meter long stick. Before sampling, wash the bottle out with clean water and let it dry.

- Take the inlet sample right below the inlet tube/piping.
- Take the outlet samples from a specific entity/object which should be placed behind the WWTP within the project design of the WWTP.
- In case the WWTP is not equipped with a specific entity/object, it is possible in emergency to take an outlet sample right from the secondary settling zone.

In case of taking a sample from the secondary settling zone be careful so that floating dirt from the water level does not get in the sample being taken. It is necessary to dip a sampling bottle just gently under water level, otherwise settled sludge will whirl up in secondary settling zone and samples will be manipulated.

- Pour the taken sample into the sampling bottle and take as quickly as possible to the lab. Keep the sampling bottles with the taken samples away from direct sunlight, the best temperature is to 5 degrees Celsius.

Generally, it is possible to take so called grab sample or mixed sample. Grab sample means that the quantity needed for the analysis is taken in one scoop. In the case of a mixed sample, the quantity needed for the analysis is gradually poured from the same smaller quantity of the taken samples in the given time interval. As a rule, casting of 8 volumetrically same samples taken in fifteen-minute intervals, which is within 2 hours, is done.

- **Taking samples and arranging their analysis based on the verdict of Water Utilization authority is the WWTP operator's duty.**
- **You will find assigned sampling and analyzing in operation regulations approved by an appropriate Water Utilization authority If WWTP is installed according to § 15a of the Water Act (on the announcement) the analyses need not to be done. However, the WWTP must be checked by the person appointed by the Ministry of the Environment each 2 years.**

21.5 OPERATION AND MAINTENANCE OF BLOWER

Blower must never operate with closed discharge pipe!

Operation and maintenance of blower is carried out according supplied technical documentation. Only some informations are specified in this manual, which ***do not replace*** „Operating instructions and maintenance" of blower.
Blower has to be always disconnected from electricity before starting of maintenance (exempt socket plug from socket, disconnect the circuit breaker).

Membrane blower SECOH ¤) Blower EFFEPIZETA ¤)

Fig. 38: Blowers

21.5.1 Membrane blower SECOH ¤)

Check regularly a noise of membrane blower, temperature of blower, undamage of electric supply. It is necessary to clean a dust filter one time in 3 months.
Membrane blower contains a signalisation of membrane damage. In case of damage, red light comes on at external case of blower.
In case that membrane has to be changed, please contact ENVI-PUR, s. r. o. (the Soběslav Plant – see page 4).

21.5.2 Blower EFFEPIZETA

Blower has to be placed in well-ventilated area with temperature up to 40 °C. In case of external location it is necessary to protect a blower from the direct sun, humidity and water. Both the gas inlet and ambient temperature has to be in range -15 °C to +40 °C.
After 10 to 15 days of operation clean a mesh filter. It is necessary to clean a filter more often in dusty environment. Dirty filter can increase a suction resistance and subsequently operating pressure, temperature and suction of dust. Clogging of filter is visualized with the aid of attachments contain a valve inside, which ejects with gradually clogging of the filter and shows degree of clogging. If the valve plug is inside in red field, it is necessary to clean a dust filter!

The Effepizeta blower also includes a safety valve, the function of which is to protect the blower from overheating and subsequent seizure. The safety valve reduces the air pressure in the system and it is very important that this valve is open. Leaking air through the safety valve is a manifestation of its correct function. Restricting the air flow through this valve can destroy the blower.

21.6 MECHANICAL FILTER OPERATION AND MAINTENANCE

WWTP operation is assured by the intermittent blower operation. The intermittent blower operation is ensured by the control unit in the electrical cabinet. Detail description of the control unit setting is given in Chapter 14.1. Individual phases of the filter cleaning are assured by gradual opening and closing of solenoid valves that are controlled by the control unit.

While putting the waste water treatment plant into operation, the presupposed optimum setting of the program was done. Avoid changing this setting wilfully without prior consultation with the authorized dealer or manufacturer because improper setting may cause malfunction of WWTP.

However, this setting can differ depending on the treatment efficiency of individual WWTP. The most variable parameter is Phase C7 when the required filter blow duration must be monitored while the meshwork is sufficiently shaken off and cleaned by the air.

21.6.1 Mechanical Filter Operation and Maintenance

- **Solenoid Valves**

Solenoid valves that are used for cleaning of tertiary filter are located in the electrical cabinet. If the valve operates check the vale for correct opening and closing at least once a month. Metallic clicking signals that the valve operates.

Follow the instructions in the solenoid valve operation manual. In the warranty period it is necessary that all the service jobs are carried out by the authorized person or manufacturer.

21.6.2 Mechanical Tertiary Filter

The tertiary filter maintenance consists of periodic visual inspection of the filter. Operator checks sufficiency of the automatic treatment to modify the intervals of individual phases if necessary.
We recommend to take out the filter from WWTP once a month to check its meshwork for intact state and wash the complete filter either in a container with water or using not so rapid stream of water from a hose (so that the meshwork cannot be damaged).

Before removing the tertiary filter from WWTP it is necessary to lower water level in the tank by about 5 cm. Use the "Servis terciárního filtru“ [Tertiary filter service] mode and Parameter START on the control unit - doing so will initiate pumping of the treated water into outlet.

If manual treatment is needed it is possible to manually start the air lift pump of the filter box cleaning by opening relevant valve on the air distributor (see Fig. 22-25 or Chapters 9.1 and 9.2).

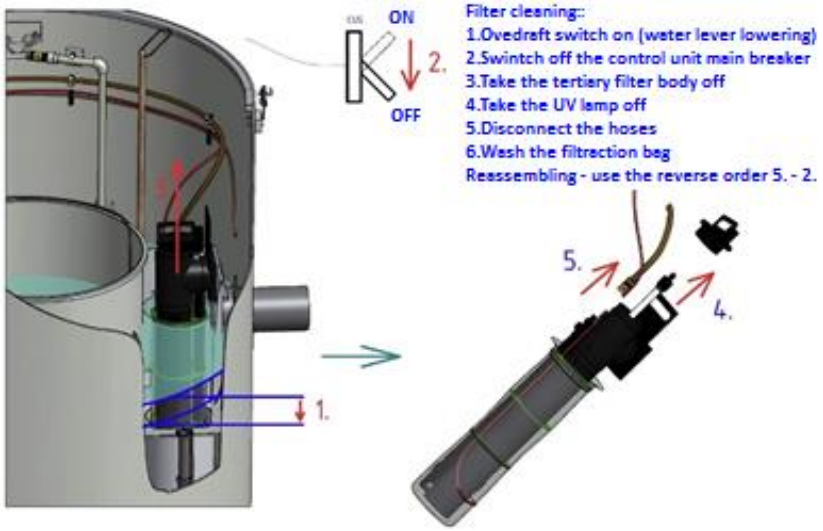

Fig. 39: Tertiary filter cleaning

21.7 UV LAMP OPERATION AND MAINTENANCE

WWTP can be optionally equipped with a germicide UV lamp that assures disinfection of the treated waste water in terms of microbiology. It is located at the treated water outlet from WWTP in the version as required by customer (immersion or above-water UV lamp). It is put into operation together with WWTP.

The summary of individual performed activities is given in the following table:

interval					activity	
day	**week**	**month**	**half a year**	**other**	**name**	**procedure**
x					daily inspection	20.8.1
	x				weekly inspection	20.8.2
		x			protective tube inspection and cleaning	20.8.3
		x		1.5 a year	replacement of UV lamp	20.8.4

21.7.1 Daily Inspection

Within the daily inspection it is necessary to verify if the equipment is on and no fault is present. Inspection does not require opening of the equipment shaft - it is done where the switchboard is situated. Check the circuit breaker for activated state or if it is open.

21.7.2 Weekly Inspection

Within the weekly inspection, it is necessary to check visually the equipment for condition. This check is beyond the daily inspection scope. When performing inspection, it is necessary to open the equipment shaft. Check the equipment for signs of the mechanical damage and check the occurrence of such an event that did not occur previously or that seems unusual to you.

21.7.3 Protective Tube Inspection and Cleaning

To assure high efficiency of UV lamp it is necessary to check UV lamp's protective tube for cleanliness once a month (or depending on the WWTP operation load) and if necessary wipe off – wash the impurities with water.

When working, proceed as follows:

- **Before removing the tertiary filter from WWTP it is necessary to lower water level in the tank by about 5 cm. Use the "Servis terciárního filtru“ [Tertiary filter service] mode and Parameter START on the control unit - doing so will initiate pumping of the treated water into outlet and the water level in WWTP is lowered.**

- Use circuit breaker to stop the equipment (deactivation of the entire WWTP),
- take out the tertiary filter body according to Figure 22,
- remove the tube with UV lamp by pulling it out,
- check the supply cable or the actual tube for damage or if any water got into the tube,
- if the tube surface is not clean, use water and soft disposable textile to clean it,
- if contamination is larger use sponge and clean water,
- insert the tube back into the tertiary filter, i.e. to the service position,
- turn the circuit breaker on again and check the CU screen for an error message (e.g. UV lamp would be connected incorrectly).

21.7.4 Replacement of UV Lamp

UV lamp has a projected service life about 10000 to 12000 hours. After this period, the efficiency of UV radiation emissions goes down even though the UV lamp emits light. This is the reason why the UV lamp needs replacement once a year.

We recommend to have the UV lamp replaced by the authorized person within the equipment service.

During the self-help replacement, proceed as follows:

- Take out the tube as when it is to be cleaned by following the procedure in 20.8.3,
- dismount the cap ring from the mating part,
- take out the sealing rubber plug from the tube (by doing so the UV lamp is also extracted),
- disconnect the cable connector from the lamp,
- connect the new lamp to the connector,
- insert the lamp and plug with seal into the tube,
- mount the cap ring onto the mating part and tighten it,
- insert the tube back into the pipe by following the procedure in 20.8.3.

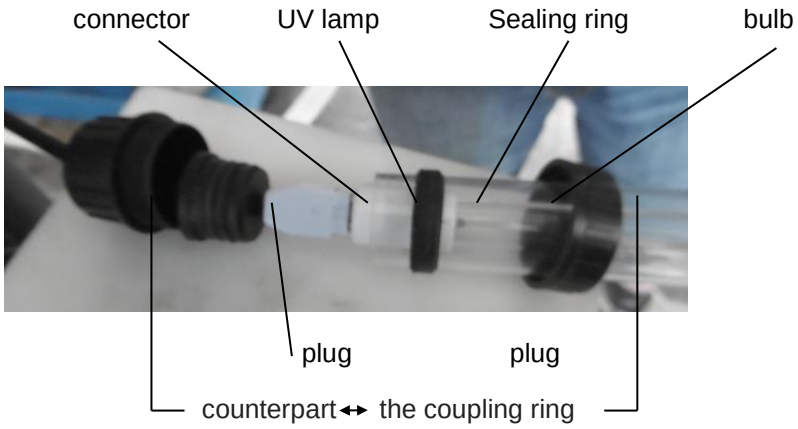

- **Always use only the UV lamp supplied as a spare part to the equipment,**
- **never pull out the plug with UV lamp by pulling at the supply cable,**
- **never remove the sealing ring from the tube,**
- **in case you found that any individual part is damaged, avoid operating the equipment and refer to ENVI-PUR, s. r. o. or to the authorized person.**

If manipulation reveals damage to any part of the tube and the supply cable, if water got into the tube or if the safety switch or the cable to the switch was damaged, stop immediately operation of the UV equipment and refer to ENVI-PUR, s.r.o. or to the authorized person.

- **Avoid cleaning the tube with sharp objects or materials to prevent its scratching.**
- **Take care when handling the tube to avoid its damage.**
- **Wear gloves when working – never tough the glass cover or UV lamp with bare hands (a fat that compromises efficiency of UV radiation is left on the glass).**
- **In case the glass cover or UV lamp is contaminated, clean them using industrial spirit.**
- **Never look directly at UV lamp when the lamp is on. There is a risk of damaged sight!**

21.8 OPERATION IN WINTER

Tank of WWTP is installed underground and other isolation is not necessary for winter operation. It is necessary pay more attention to the OSH rules in winter. Specially, it is necessary to maintain accesses to operated devices in operation status (dispose of snow, slippery ice with aid of scavenging).
It is suitable to pump out the excessive sludge before winter, if it is necessary. Suitable amount of sludge is approx. 40 – 50 % for winter operation. Temperature of wastewater is decreased in winter therefore activity of bacteria is decreased as well. Treating efficiency is lower in winter and temperature of waste water should not fall under 5 °C.
If waste water is permanently supplied to WWTP and blower is operated, there is no risk of freezing of technology.
Pay special attention to blower, if it is placed in pillar or in other object (e.g.in ground).
We further recommend to check possible presence of condensing water in the "delivery pipe“ from the blower to avoid freezing.

21.9 KEEPING THE OPERATION DOCUMENTS

According to the regulations it’s necessary to document the WWTP running in the **WWTP Operations Log**. All you need to do is keeping the log in a form of separate textbook. You need to write down these to the operations log:

- Carrying out of week maintenance,
- occurrence of faults,
- pumping off the sludge,
- sedimentation test results,
- sampling,
- service and repairs performed,
- changes of the control unit setting,
- WWTP shut down.

- **The operator of the WWTP is responsible for the documentation.**
- **The documentation is to be checked by the relevant authorities.**
- **The documentation is to be given by the WWTP operator to the supplier during the warranty service.**

If the operator doesn’t give the operations log during the warranty service, it may not be declared!

22 FAILURES AND TROUBLESHOOTING

22.1 GENERAL

During the WWTP operation, there may be functional or technological failures. Functional failures lead as a rule to an immediate WWTP shutdown; technological failures make the efficiency of cleaning worse in short or long term operating.

22.2 FUNCTIONAL FAILURES

22.2.1 Secoh blower failure [illegible]

A light failure signalization of the membrane air pump (light) means blower failure. In this case it is necessary to contact the manufacturer of authorized dealer.

22.2.2 Effepizeta blower failure [illegible]

The failure of motor starter is light indicated on the switchboard. In case of failure, get in it again. If the failure is repeated more frequently (e.g. after few minutes or seconds), check of wiring of blower is necessary. Only authorized person can make this control. Contact the WWTP manufacturer.

22.2.3 Indicated Faults – BCC CONTROL UNIT

indication	cause	remedy
display is not on	circuit breaker not activated	activate the circuit breaker
the decimal point following the first or the second pair of characters is not flashing	control unit inoperative	switch off and, after 5 s, on the circuit breaker, wait for the point to stop flashing in one minute
Err 1 displayed	flat Battery CR2032	replace the battery placed in the holder under the red cover of the control unit (pull the battery out from its holder suing a sharp object)
Err 2 displayed	the parameter memory faulty	check and, if necessary, set again all the unit's parameters in the P1 to P3 modes
Err 3 displayed	real time was initialized	set the correct time in TIME mode.

22.2.4 Indicated failures – control unit COMFORT PLUS

Faults are indicated on the control unit display. Overview of failures and their solution.

Indication	Cause	Remedy
display off	circuit breaker not on	turn on the circuit breaker
real time clock not running	control unit inoperative	turn off and, after 5 s, on the circuit breaker and wait for the unit time to show up. If it does not agree set it in the menu.
no outputs are switching	control unit inoperative	turn off and, after 5 s, on the circuit breaker and wait for the blower operation to switch for the first time. I.e. about 30 s from the circuit breaker activation. Check all the parameters for setting in menu P1 to P11
the main treating cycle C3 – C6 not running	control unit inoperative	turn off and, after 5 s, on the circuit breaker and wait for the blower operation to switch for the first time. I.e. about 30 s from the circuit breaker activation. Check all the parameters for setting in menu P1 to P11

display shows message "E1 <Pressure"	blower failure	check the blower operation, contact service workshop
display shows message "E2 UV"	UV lamp failure	check the UV lamp operation, contact service workshop
display shows message "E9 Lith Bat."	the backup battery of the real time clock is flat	replace battery CR2032, check the real time clock for setting and all the parameters for setting in menu P1 to P11
display shows message "E10"	Interrupted data flow. Disconnected probe.	check the oxygen sensor for connection, contact service workshop
display shows message "E20"	Check sum error during communication with the intelligent probe	check the oxygen sensor for connection, contact service workshop
display shows message "E51"	Communication via RS485 is temporarily prohibited	temporary error indicating no failure
display shows message "E52"	Short or non response of the sensor with the MODBUS_RTU protocol (interrupted cable, error in the sensor powering)	check the oxygen sensor for connection, contact service workshop
display shows message "E53"	Different address of the sensor's question and response with the MODBUS_RTU protocol (communication discontinued)	if the error occurs frequently, check the oxygen sensor for connection, contact service workshop
display shows message "E54"	Common error response of the sensor with the MODBUS_RTU protocol (communication ok, sensor faulty)	turn off and, after 5 s, on the circuit breaker and wait for the unit time to show up. If the error persists contact the service workshop.
display shows message "E55"	Erroneous CRC of the sensor's response with the MODBUS_RTU protocol (communication discontinued)	if the error occurs frequently, check the oxygen sensor for connection, contact service workshop
display shows message "E56"	Different code of the sensor's question and response with the MODBUS_RTU protocol (communication discontinued)	if the error occurs frequently, check the oxygen sensor for connection, contact service workshop
display shows message "E57"	Erroneous check reading of the recorded sensor data with the MODBUS_RTU protocol (communication discontinued)	if the error occurs frequently, check the oxygen sensor for connection, contact service workshop
display shows message "E255"	**Vacant measuring channel**	**Erroneous parametrization, check the parameters for setting or, if necessary, reset the parameters to the factory settings.**

22.2.5 Other failures

It is possible to detect failures visually within operation and maintenance. These are failures, which can be caused by a failure of the membrane blower, by cutting off the air supply into the reactor or by a failure of a functional part of the reactor or dosing pump.

22.3 TECHNOLOGICAL FAILURES

Technological failures can be caused by burdening/loading the WWTP which is not conforming to the project documentation (large water quantity supplying the WWTP, supplying water with constitution nonconforming home sewage water) or by neglecting operation and maintenance. Technological failures may show:

- By inadequate amount of activated sludge (see 19.5.4),
- by the presence of white foam on the water level of the nitrification zone,
- by bad smell of water in the reactor,
- by increased incidence of dirt on the water level of the secondary settling zone,
- by increased incidence of small flocs in the drain canal,
- by breaching of guaranteed indicators in sewage water being let out found out during taking samples.

In case of presence or suspicion of technological failure proceed the following way:

- Check whether there has not been any functional failure (if so, correct the failure),
- check whether or not the substances capable of destroying the living microorganisms were supplied into WWTP (see Chapter 5).

In case of inadequate amout of activated sludge

- Check a volume of activated sludge in WWTP by sedimentation test:

1. Volume of sludge under 30 %: *Concentration of sludge is not sufficient in tank.* This event means, that activated sludge wasn´t formed yet. After starting-up procedure it means, that sludge was destroyed or was washed out (inlet of toxic substances, excessive amount of waste water flow in to WWTP). Try to find a reason and engage reparation. Wait approx. 2 weeks and make a sedimentation test again, whether a sludge is formed.
2. Volume of sludge above 70 %: *High concentration of activated sludge is present in the tank.* Pump out the excess sludge by chapter 20.5.5.
3. Volume of sludge above 70 % although the sludge was pumped out in last weeks: *Sludge was pumped out insufficiently or filamentous bulking occurred.* Pump out the sludge again. If the level of sludge is still high after second pumping, this is a filamentous bulking, there is an overgrowth of filamentous bacteria. Filamentous bacteria hold flocs of sludge in suspension and they don´t settle. Supernatant (indented water) is by contraries very clear. Thick foam may create in activation zone. Filamentous bacteria overgrowth usually (they are always at lower amount in activated sludge), if operation conditions of WWTP are changed (excessive loading of WWTP, toxic substances, GREASE!, change of temperature, low pH, too old sludge, inconvenient aeration)

   Fibrous microorganisms can be suppressed by chlorination or by loading the sludge with coagulate (by dosing PAX) or by pumping off the whole WWTP, clean it and ripen it again. Consult the suitable remedy with the Service Technician or with the manufacturer.

In case of presence of white foam on the water level of the nitrification zone:

- Check a volume of activated sludge in WWTP by sedimentation test.
- White and very light foam is created in large amount in phase of starting-up WWTP or in the case of low concentration of sludge in system. In normal operation this foam can signalize excessive drainage of spare sludge or massive leak of suspended solids from secondary settling tank. The foam will disappear spontaneously, if enough amount of sludge is created – approx. 20 – 30 %.
- Another reason why the white foam is created can be excessive discharge of soaps, detergents (washing powder etc.) or different industrial waters. In such a case limit their application.

In case WWTP smells:

- In most cases, smelling WWTP indicates a shortage of oxygen!
- Check the blower and its operation - if it is ok proceed as instructed below:
- Check if the aeration elements are bubbled through sufficiently, if sufficient amount of air is supplied into the aeration elements (e.g. larger opening of the tap at the air supply to the air lift pump causes withdrawal of a large amount of air and, as a result, the aeration elements oxidize the waste water insufficiently).
- In Variant **BASIC** set the timer/time relay for the daily blower operation interval longer by about 15 min/h.
- In Variant **OPTIMA** set the program higher by one level.
- In Variant **COMFORT/EXCLUSIVE/EXCLUSIVE UV** set the control unit's parameter in P1 mode up by one level.
- Apply the sedimentation test to check the amount of sludge in WWTP and verify whether the excessive amount of sludge that is quicker in consuming the suplied oxygen is no longer present. If the amount of sludge exceeds 70 %, perform sludging.

If the WWTP smells bad and sludge has grey or black colour:
- in the BASIC variant, set the blower to the permanent operation for 24 h/d
- in the OPTIMA variant, set the program 9 to 24 h/d
- in the COMFORT variant, blower needs to be started to Program P1 9

This special mode must be maintained for a minimum period of 1 week (till WWTP ceases to smell and the sludge starts to change its colour to brown).

In case of higher occurrence of the floated sludge (i.e. the surfaced impurities) on the level of the secondary settling zone:

- Use the sedimentation test to check the amount of sludge in WWTP,
- if the amount of sludge exceeds 70 %, perform sludging,
- if the amount of sludge is less or if the result is similar as that in the given figure the trouble is likely excessive oxidization of the nitrification zone or insufficient recirculation of air done by the return sludge's air lift pump.

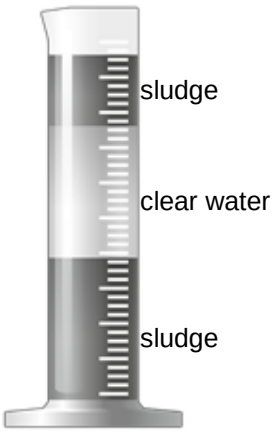

floating substances
- Denitrification

For Variants BASIC, OPTIMA

- Slightly increase the pumping of return sludge from the secondary settling tank (= addition of larger amount of air by turning the relevant valve on the air distributor – this will reduce the sludge delay in the secondary settling tank)

OR

- in Variant BASIC set longer blower deactivation intervals on the timer/time relay (beware! the maximum length of the blower stopping interval in a day can be 45 min or 60 min at night)**,**
- in Variant OPTIMA set the program lower by one or two levels.

- **Always try only one procedure in the first instance, if it fails, try the second procedure.**

For Variant COMFORT/EXCLUSIVE/EXCLUSIVE UV

- Set the control unit's parameter in P1 mode lower by one level - if the suituation repeats increase the cleaning period by changing the code in P3 mode (frequency of cleaning the secondary settling tank's level)

OR

- slightly increase the pumping of return sludge from the secondary settling tank (= addition of larger amount of air by turning the relevant valve on the air distributor – this will reduce the sludge delay in the secondary settling tank).

- **Always try only one procedure in the first instance, if it fails, try the second procedure.**

In case of higher occurrence of small flakes in the outlet (turbid outlet)

- This condition may appear in the WWTP ripening period when the sludge is formed by small light-weight flakes. The turbidity in the outlet disappears after ripening.
- If this condition occurred in the ripened WWTP it may mean an abrupt change in the waste water quality in the inlet (low pH, temperature reduction, inlet of toxic substances, increased frequency of washing) by excessive aeration of the aeration system when the flakes disintegrate or by excessive sludging of WWTP (excessive amount of sludge).
- Try to identify the cause and rectify it. Measure pH and, if necessary, increase its value according to 20.5.3. In case of an excessive washing frequency the water in WWTP smells "after soap“.Limit washing and operate the blower at the maximum output for about 1 week (washing agents limit the oxygen transfer from air into water). In case WWTP is overaerated, lower the program in Variant OPTIMA and COMFORT by one level, reduce the daily blower operation time in Variant BASIC by a total of about 2 – 3 h/24 h.
- If turbidity in the outlet is permanent, WWTP is likely to be overloaded for a long period of time.
- Turbidity in the outlet may also occur in the case of insufficient aeration when the sludge colour also changes into grey to black colour and the water starts to smell.
- If you are in doubt on how to rectify this trouble, contact your Service Technician or manufacturer.

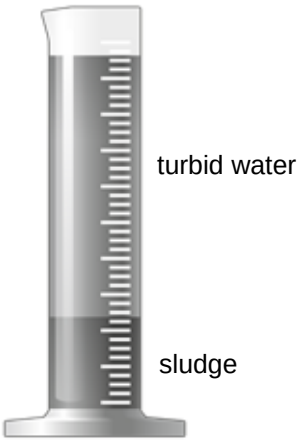

deflocculation-Too intensive aeration
- Deficit of oxygen
- Poisoning of sludge

In case the guaranteed indicators in the drained waste water identified in the process of sampling are not complied with

- This condition may appear in the WWTP ripening period when samples should not be taken.
- The cause is likely to be one of the faults above.

- **In all cases wait for the next weekly inspection to see if the WWTP operation is corrected.**
- **If the faults fail to be rectified ask for the service intervention.**

22.3.1 UV Lamp

The failure of UV lamp or its supply circuit is shown by the failure of circuit breaker. In this case turn on the circuit breaker again. If the circuit breaker fails repeatedly it is possible to replace the UV lamp by following the procedure in Chapter 20.8.3.

If the failure is not rectified by the replacement of UV lamp avoid operating the equipment and refer to ENVI-PUR, s. r. o. or to the authorized person.

23 INTERRUPTING AND STOPPING OPERATION

23.1 GENERAL

In case there will be no sewage water supplying the reactor for a longer period of time (e.g. during a long holiday or during the seasonal operation), it is necessary to take actions which will enable the easy restarting of the WWTP into service.

23.2 SHORT-TERM SHUTDOWN

Stopping the influent within three weeks (e.g. during holiday) will not affect the operation of the WWTP. It is advisable to set up:

- In the BASIC variant, set the blower operation time interval (phase C1) to the shortest possible time (e.g. 15 minutes of operation + 75 minutes of stopped state of the blower).
- In the OPTIMA variant, set the program 0.
- In the COMFORT variant, set the time intervals on the control unit for phase C1 and C2 in P1 mode to code 0. Turn off the dosing pump for PAX.

After the return of influent, do not forget to set up the original time intervals when the membrane blower is switched on and when it is switched off.

When stopping influent for a longer period of time, it is necessary to put the WWTP out of service (see 22.3).

23.3 COMPLETE SHUTDOWN

In case of complete shutdown it is necessary:

- Completely switch off intake of electric power (switch off circuit breaker).
- Completely wash out dosing trace of PAX with clean water (suction filter dip into clean water and dosing pump switch on until clean water will issue from injection valve in WWTP, clean suction filter and injection valve), if WWTP is out of order/shut down in winter season, it is appropriate to drain whole volume of water from dosing trace (Take off the suction filter from water, leave it on the air and switch on a dosing pump, until all the water will be displaced from hose), after that you can switch off dosing pump.
- To pump out completely the whole reactor in the manner similar to 20.5.5.
- To clean the reactor by washing out with clean water and again to pump water out.
- To fill the reactor with clean (service) water.

While re-introduction to the process the WWTP ripening must happen. See Chapter 19.

24 OPTIONAL ACCESSORIES

24.1 GERMICIDAL UV LAMP

24.1.1 Germicidal UV lamp in WWTP

The accessories for the BC EXCLUSIVE type WWTP's.

WWTP can be optionally equipped with the tertiary filter with the modification for the immersion germicide UV lamp that assures disinfection of the treated waste water in terms of microbiology. It is put into operation together with WWTP.

The modification requires that the existing power switchboard is replaced with the power switchboard modified for UV and tertiary filter and that the cables for the UV lamp control and powering are pulled through.

24.1.2 Germicidal UV Lamp outside of WWTP

The accessories for all the WWTP types.

WWTP can be optionally equipped with the UV Maxi IN equipment with the immersion UV lamp that assures disinfection of the treated waste water in terms of microbiology. It is put into operation together with WWTP.

24.2 OXYGEN SENSOR

The accessories for the BC COMFORT, EXCLUSIVE, EXCLUSIVE UV type WWTP's.

Oxygen sensor is used to control the blower operation depending on the actual need for oxygen in the nitrification zone. This results in a reduction of blower operation related costs as compared to the control by time intervals as well as in achievement of the optimum conditions of the activation process. Setting of the oxygen sensor is detailed in Chapter 14.1. The maintenance consists in occasional spraying with water – as needed. The sensor shall be set by the authorized person.

24.3 SEDIMENT TRAP FOR PUMPING SEDIMENT TRAP FOR PUMPING OF EXCESSIVE SLUDGE

The accessories for the BC COMFORT, EXCLUSIVE, EXCLUSIVE UV type WWTP's.

If the storage volume capacity for the excessive sludge needs to be enlarged along with the pumping-off interval for the excessive sludge from WWTP, the WWTP can be equipped with the sediment trap. The excessive sludge is pumped from WWTP into the sediment trap using the (immersion electric) pump or the air lift pump. The raised sludge id disposed of in conformity with the applicable legislation.

24.4 PUMP SUMP

The pump sump is used mainly to balance the hydraulic WWTP load in time (it eliminates irregularities in the inlet) or the irregularities in the terrain. Consult application and maintenance of the pump sump with the authorized person.

24.5 FORESEATED PRIM SEDIMENTATION TANK

The primary sedimentation tank (hereianfter PRIM) is used to balance the hydraulic WWTP load in time (it eliminates irregularities in the inlet). The PRIM tank is also used to reduce the WWTP load mainly for the parameters of CSB and the undissolved substances. It can further be used for retention of the excessive sludge from WWTP (so called sludging of WWTP into the septic tank). In this case the PRIM tank can be partially used as the sediment trap.

24.6 SLUDGE DEWATERING EQUIPMENT (SDE)

The sludge dewatering equipment is designed to dewater the primary, stabilized or raw activated or mixed sludge. The equipment is typical of its simple, universal design, operational reliability and low energy demand. The dewatering equipment can be used both for the new waste water treatment plants and for modernization of the existing waste water treatment plants. Sludge dewatering is possible by using special filtering bags with addition of polyflocculant into the supplied sludge.

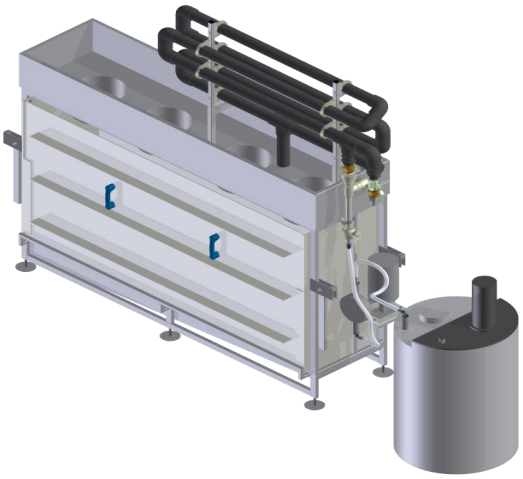

25 TECHNICAL SPECIFICATIONS

25.1 HYDROTECHNICAL PARAMETERS

Basic parameters of WWTP Bio Cleaner® BC 4-50, BC 4-50 DUO:

BIO CLEANER®	**BC 4**	**BC 6**	**BC 8**	**BC 10**	**BC 12**	**BC 16**	**BC 20**	**BC 25**	**BC 30**	**BC 40**	**BC 50**
WWTP capacity and its loading											
number of the connected inhabitants (PE)[1]	**4**	**6**	**8**	**10**	**12**	**16**	**20**	**25**	**30**	**40**	**50**
possible number of the connected persons[2]	< 4	< 6	< 8	< 10	< 12	< 16	< 20	< 25	< 30	< 40	< 50
nominal volume of sewage water (m^3/day)	0,6	0,9	1,2	1,5	1,8	2,4	3,0	3,75	4,5	6,0	7,5
nominal loading of WWTP in BOD_5 (g/day)	240	360	480	600	720	960	1200	1500	1800	2400	3000
optimal concentration of dissolved O_2											
Denitrifikační zóna (mg/l)	0 – 0,5										
Aktivačně-nitrifikační zóna (mg/l)	1,5 – 2,5										

Parameters of treated water from WWTP BASIC P-LESS, OPTIMA P-LESS, COMFORT P-LESS		
Parametr	**Output values**	**Efficiency**
COD (mg/l)	29	96 % 4)
BOD_5 (mg/l)	4	98 % 4)
SS (mg/l)	10	97 % 4)
$N\text{-}NH_4^+$ (mg/l) *)	16	71 % 4)
N total (mg/l) 3) **)	25	64 % 4)
P total (mg/l) ***)	1,1	94 % 4)

Parameters of treated water EXCLUSIVE P-LESS		
Parametr	**Output values**	**Efficiency**
COD (mg/l)	32	95 % 4)
BOD_5 (mg/l)	5	98 % 4)
SS (mg/l)	17	95 % 4)
$N\text{-}NH_4^+$ (mg/l) *)	15	73 % 4)
N total (mg/l) 3) **)	25	64 % 4)
P total (mg/l) ***)	1,5	91 % 4)

Parameters of treated water EXCLUSIVE UV P-LESS		
Parametr	**Output values**	**Efficiency**
COD (mg/l)	32	95 % 4)
BOD_5 (mg/l)	5	98 % 4)
SS (mg/l)	17	95 % 4)
$N\text{-}NH_4^+$ (mg/l) *)	15	73 % 4)
N total (mg/l) 3) **)	25	64 % 4)

P total (mg/l) ***)	1,5	91 % 4)
Enteroccoci ****)	3 KTJ/100 ml 5)	99,99 %
Escherichia coli ****)	2 KTJ/100 ml 5)	99,99 %
Fecal coliform bacteria ****)	7 KTJ/100 ml 5)	99,99 %
Coliform bacteria ****)	48 KTJ/100 ml 5)	99,99 %
Somatic coliphage ****)	0 PTJ/100 ml 5)	100 %
Parameters of treated water BASIC P-LESS DUO, OPTIMA P-LESS DUO, COMFORT P-LESS DUO		
Parametr	**Output values**	**Efficiency**
COD (mg/l)	24	97 % 4)
BOD_5 (mg/l)	3	99 % 4)
SS (mg/l)	8	98 % 4)
$N\text{-}NH_4^+$ (mg/l) *)	13	80 % 4)
N total (mg/l) 3) **)	28	59 % 4)
P total (mg/l) ***)	0,9	95 % 4)
Parameters of treated water EXCLUSIVE P-LESS DUO		
Parametr	**Output values**	**Efficiency**
COD (mg/l)	31	96 % 4)
BOD_5 (mg/l)	4	98 % 4)
SS (mg/l)	20	94 % 4)
$N\text{-}NH_4^+$ (mg/l) *)	15	81 % 4)
N total (mg/l) 3) **)	28	59 % 4)
P total (mg/l) ***)	1,6	90 % 4)
Parameters of treated water EXCLUSIVE UV P-LESS DUO		
Parametr	**Output values**	**Efficiency**
COD (mg/l)	31	96 % 4)
BOD_5 (mg/l)	4	98 % 4)
SS (mg/l)	20	94 % 4)
$N\text{-}NH_4^+$ (mg/l) *)	15	81 % 4)
N total (mg/l) 3) **)	28	59 % 4)
P total (mg/l) ***)	1,6	90 % 4)
Enteroccoci ****)	0 KTJ/100 ml 5)	100 %
Escherichia coli ****)	0 KTJ/100 ml 5)	100 %
Fecal coliform bacteria ****)	1 KTJ/100 ml 5)	100 %
Coliform bacteria ****)	5 KTJ/100 ml 5)	100 %
Somatic coliphage ****)	0 PTJ/100 ml 5)	100 %
Parameters of treated water BASIC, OPTIMA, COMFORT		
Parametr	**Output values**	**Efficiency**

COD (mg/l)	49	92 %
BOD_5 (mg/l)	5,6	98 %
SS (mg/l)	13	96 %
$N\text{-}NH_4^+$ (mg/l) *)	10	77 %
N total (mg/l)	-	-
P total (mg/l)	-	-
Parameters of treated water BASIC DUO, OPTIMA DUO, COMFORT DUO		
Parametr	**Output values**	**Efficiency**
COD (mg/l)	27	94 %
BOD_5 (mg/l)	3	99 %
SS (mg/l)	7	97 %
$N\text{-}NH_4^+$ (mg/l) *)	2,4	96 %
N total (mg/l) 3) **)	44	51 %
P total (mg/l)	7,9	19 %

Comment:
the stated values that correspond to the "Declaration of Properties“ are the values obtained according to ČSN EN 12566-3+A2
1) PE = equivalent resident is defined by the production of contaminants amounting to 60 g BSK_5 a day and the production of waste water of 150 l/day
2) the rated substance and hydraulic load of WWTP must not be exceeded
3) with the input load N, a maximum total of 11 g/resident*day
4) the mean value of all the results
5) geometrical mean
*) if the waste water temperature at the outlet from the biological stage is not lower than T > 12 °C
**) if the waste water temperature is within the value range of Tmin = 3.4 °C; Tmax = 19.8 °C
***) with the equipment for chemical precipitation of phosphorus
****) with the UV device for disinfection of the treated waste water

Comment to the efficiencies of the waste water treatment:
The given parameters of the domestic waste water treatment plant of BioCleaner BC type corresponds to the given model with the mentioned supplemented additional equipment (for phosphorus precipitation, UV disinfection, etc.).
The BC 4-50 and BC 4-50 DUO model above will enable compliance of all the parameters imposed by the applicable legislative regulations as amended:
- Government Decree No. 401/2015 Coll., on indicators and values of permissible pollution of surface water and wastewater, details of the permission of wastewater discharge into surface water and sewerage systems, and about sensitive areas.
Government Decree No. 57/2016 Coll., on indicators and values of acceptable waste water pollution and requisites of a permit to discharge wastewater into groundwater.

25.2 VOLUMES AND WEIGHTS

WWTP BioCleaner® BC 4-12 PP, BC 4-12 PP DUO (c):

BIO CLEANER®	BC 4 PP	BC 6 PP	BC 8 PP	BC 10 PP	BC 12 PP
Primary sedimentation volume (m^3)	1,14	1,85	2,05	2,82	3,62
Denitrification zone volume (m^3)	0,45	0,50	0,80	0,90	1,21
Nitrification zone volume (m^3)	0,91	1,18	1,60	2,10	2,52
Sedimentation zone volume (m^3)	0,41	0,63	0,81	1,04	1,22
Total volume of reactor (m^3)	1,77	2,31	3,21	4,04	4,95
The area of sedimentation tank (m^2)	0,43	0,66	0,72	0,72	0,82
Maximum weight of the tank without any charge and of the primary sedimentation tank (kg)	150	165	170	180	200

Remark: the domestic waste water treatment plants designated as BC 4-12 PP DUO are delivered with the tank for the primary sedimentation.

WWTP BioCleaner® BC 16-50 PP, BC 16-30 PP DUO (cylindrical):

BIO CLEANER®	BC 16 PP	BC 20 PP	BC 25 PP	BC 30 PP	BC 40 PP	BC 50 PP
Primary sedimentation volume (m^3)	4,07	3,68	6,32	7,51	--	--
Denitrification zone volume (m^3)	1,46	1,80	2,05	2,67	3,62	4,54
Nitrification zone volume (m^3)	3,42	4,20	4,90	6,21	8,41	10,59
Sedimentation zone volume (m^3)	1,62	2,03	2,52	3,05	3,88	4,72
Total volume of reactor (m^3)	6,50	8,03	9,47	11,93	15,91	19,85
The area of sedimentation tank (m^2)	1,08	1,37	1,70	2,06	2,60	3,14
Maximum weight of the tank without any charge and of the primary sedimentation tank (kg)	310	370	470	540	650	750

Remark: the domestic waste water treatment plants designated as BC 16-50 PP DUO are delivered with the tank for the primary sedimentation.

WWTP BioCleaner® BC 16-50 K PP, BC 16-30 K PP DUO (containerized):

BIO CLEANER®	BC 16 K PP	BC 20 K PP	BC 25 K PP	BC 30 K PP	BC 40 K PP	BC 50 K PP
Primary sedimentation volume (m^3)	4,02	5,41	6,32	8,20	10,30	12,83
Denitrification zone volume (m^3)	1,46	1,80	2,24	2,66	3,58	4,58
Nitrification zone volume (m^3)	3,42	4,20	5,24	6,21	8,34	10,68
Sedimentation zone volume (m^3)	1,62	2,03	2,52	3,05	3,88	4,72
Total volume of reactor (m^3)	6,50	8,03	10,00	11,92	15,80	19,98
The area of sedimentation tank (m^2)	1,13	2,01	2,69	2,84	2,84	3,56
Maximum weight of the tank without any charge and of the primary sedimentation tank (kg)	900	1 000	1 300	1 400	1 900	2 000

Remark: the domestic waste water treatment plants designated as BC 16-50 PP DUO are delivered with the tank for the primary sedimentation.

WWTP BioCleaner® BC 4-20 B, BC 4-12 B DUO (cylindrical):

BIO CLEANER®	BC 4 B	BC 6 B	BC 8 B	BC 10 B	BC 12 B	BC 16 B	BC 20 B
Primary sedimentation volume (m^3)	1,25	1,59	2,19	3,16	3,32	--	--
Denitrification zone volume (m^3)	0,45	0,50	0,80	1,25	1,34	1,46	1,80
Nitrification zone volume (m^3)	0,91	1,18	1,60	2,73	2,72	3,42	4,20
Sedimentation zone volume (m^3)	0,41	0,63	0,81	1,04	1,22	1,62	2,03
Total volume of reactor (m^3)	1,77	2,31	3,21	5,02	5,28	6,50	8,03
The area of sedimentation tank (m^2)	0,43	0,66	0,72	0,72	0,82	1,08	1,37
Maximum weight of the tank without any charge and of the primary sedimentation tank (kg)	2 200	3 650	3 750	4 000	4 700	5 000	5 000

Remark: the domestic waste water treatment plants designated as BC 4-12 B DUO are delivered with the tank for the primary sedimentation.

WWTP BioCleaner® BC 16-50 K B, BC 16-50 K B DUO (containerized):

BIO CLEANER®	BC 16 K B	BC 20 K B	BC 25 K B	BC 30 K B	BC 40 K B	BC 50 K B
Primary sedimentation volume (m^3)	4,54	5,69	6,32	10,43	16,20	15,20
Denitrification zone volume (m^3)	1,46	2,11	2,24	2,87	3,58	4,53
Nitrification zone volume (m^3)	3,42	4,82	5,24	6,64	8,34	10,69
Sedimentation zone volume (m^3)	1,62	2,03	2,52	3,05	3,88	4,72
Total volume of reactor (m^3)	6,50	8,96	10,00	12,56	15,80	25,92
The area of sedimentation tank (m^2)	1,13	2,01	2,69	2,84	2,84	5,15
Maximum weight of the tank without any charge and of the primary sedimentation tank (kg)	5 970	7 500	11 090	13 960	13 960	20 870

Remark: the domestic waste water treatment plants designated as BC 16-50 B DUO are delivered with the tank for the primary sedimentation

25.3 NOISE EMISSIONS

The noise load for the BioCleaner® BC 4-50, BC 16-50 K (container) waste water treatment plants:

BIO CLEANER®	BC 4	BC 6	BC 8	BC 10	BC 12	BC 16	BC 16 K	BC 20	BC 20 K	BC 25	BC 25 K	BC 30	BC 30 K	BC 40	BC 40 K	BC 50	BC 50 K
Blower	JDK 60	JDK 80	JDK 100	JDK 120	JDK 150	JDK 200	JDK 200	JDK 250	JDK 300	JDK 300	JDK 400	JDK 400	JDK 500	JDK 500	JDK 500	FPZ R 20 MD	FPZ R 30 MD
Noise emissions (Lp) dB (A)	36	38	38	45	44	45	46	52	52	52	54	54	58	58	58	65	68

Remark: The given values measured at a distance of 1 m from the machine set are in compliance with the technical certificates handed over by the equipment manufacturer.

Only the blower is the source of noise in the BioCleaner® BC 4-50 waste water treatment plants.

25.4 MAXIMUM CAPPING HEIGHT AND MAXIMUM ADMISSIBLE PEDESTRIAN LOAD

BIO CLEANER®	**BC 4 až BC 50** (identical for all the variants)
Maximum height of the capping	0.0 m
Maximum acceptable load by pedestrians	2.5 kN/m^2

25.5 ELECTRICAL INSTALLATION

Basic parameters for wiring to the electrical installation:

BIO CLEANER®	Blower type	Installed power input *)	Voltage	Security of the feeder cable	Feeder cable	Connection of WWTP switchboard
BC 4	JDK 60	40 W	230 V / 50 Hz	4 A	CYKY-J 3x2,5	Connection through the protected 230 V socket wired via the earth-leakage breaker
BC 6	JDK 80	50W	230 V / 50 Hz	4 A	CYKY-J 3x2,5	
BC 8	JDK 100	70 W	230 V / 50 Hz	4 A	CYKY-J 3x2,5	
BC 10	JDK 120	95 W	230 V / 50 Hz	4 A	CYKY-J 3x2,5	
BC 12	JDK 150	115 W	230 V / 50 Hz	4 A	CYKY-J 3x2,5	
BC 16	JDK 200	180 W	230 V / 50 Hz	4 A	CYKY-J 3x2,5	
BC 16 K	JDK 200	180 W	230 V / 50 Hz	4 A	CYKY-J 3x2,5	
BC 20	JDK 250	225W	230 V / 50 Hz	4 A	CYKY-J 3x2,5	
BC 20 K	JDK 300	230 W	230 V / 50 Hz	4 A	CYKY-J 3x2,5	
BC 25	JDK 300	230 W	230 V / 50 Hz	6 A	CYKY-J 3x2,5	
BC 25 K	JDK 400	360 W	230 V / 50 Hz	6 A	CYKY-J 3x2,5	
BC 30	JDK 400	360 W	230 V / 50 Hz	6 A	CYKY-J 3x2,5	
BC 30 K	JDK 400	360 W	230 V / 50 Hz	6 A	CYKY-J 3x2,5	
BC 40	JDK 500	450 W	230 V / 50 Hz	6 A	CYKY-J 3x2,5	
BC 40 K	JDK 500	450 W	230 V / 50 Hz	6 A	CYKY-J 3x2,5	
BC 50	JDK 500	450 W	230 V / 50 Hz	6 A	CYKY-J 3x2,5	
BC 50 K	JDK 500	450 W	230 V / 50 Hz	6 A	CYKY-J 3x2,5	

Remark: *) Instaled power of blowers delivered with WWTP Bio Cleaner.

25.6 STANDARDS AND REGULATIONS

25.6.1 Design Standards and Regulations

With its structure and design, the BioCleaner type WWTP complies namely the following regulations and standards:

- Government Decree No. 176/ 2008 Coll. as amended that complies with Directive 2006/42/EC – the machinery,
- Government Decree No. 117/2016 Coll. that complies with Directive 2004/108/EC - the electromagnetic compatibility,
- Government Decree No. 190/2002 Coll. that complies with Directive 89/106/ECC – the building products,
- ČSN EN 12566-3+A2,
- ČSN EN ISO 12100,
- ČSN EN 60335-1 ed. 3,
- ČSN EN 61000-6-3 ed. 2,
- ČSN EN 61000-6-1 ed. 2,
- ČSN EN 1992-1-1,
- ČSN 33 2000-4-41 ed. 2.

25.6.2 Service Standards and Regulations

With the equipment in operation follow this manual and generally applicable regulations and standards that pertain namely to:

- The occupational safety and health,
- operation of machinery and equipment,
- operation of electrical equipment.

The instructions in this Technical Certificate are assembled on our experience with the aim to acquire optimum results when using the product. We bear no responsibility for any damages caused by improperly selected product, incorrect use or poor quality processing.

This Technical Certificate amends and substitutes all of the previous issues. The manufacturer reserves the right for possible later amendments and alterations.

Declaration of Properties

No:

envi pur
rethinking water

1. Unique product type identification code

Identifier	A			B	C	D	E		F
BIO CLEANER BC*	4	15	35	no marking (circular)	no marking	no marking	BASIC	BASIC DUO	no marking (no phospsorus predpitation)
	6	16	40	K (rectangular)	PE	with a lid	OPTIMA	OPTIMA DUO	P-LESS (with phosphor precipitation)
	8	20	45		PP	with an attachment	COMFORT	COMFORT DUO	
	10	25	50		SL	N (not self-supporting)	EXCLUSIVE	EXCLUSIVE DUO	
	12	30			B		EXCLUSIVE UV	EXCLUSIVE UV DUO	

* according to the specified identifier

2. Type, series or serial number or any other element identifying construction products according to Art. 11, Section 4:
Serial Number: see the number of the Declaration

3. Intended use or intended uses of the construction product in compliance with the relevant harmonized technical specification according to the qualification of the Producer: Biological Activation Wastewater Treatment Plant

4. Name, business or registered trademark and contact address of the Producer according to Art. 11, Section 5:
ENVI-PUR, s.r.o., Na Vlcovce 13/4, 160 00 Prague 6 – Dejvice, Czech Republic

5. Name and contact address of an authorized representative with power of attorney related to the tasks specified in Art. 12, Section 2: ENVI-PUR Belgorod

6. System or systems of assessing and verifying the stability of the properties of construction products as specified in Annex V: 3

7. In case of a declaration of properties regarding a construction product which the harmonized standard applies to:
The Prague Technical and Testing Institute for Construction, Notified Body No. 1020, Prosecka 76, Prague 9, company identification code: 00015679, executed an initial test of the product type according to System 3 and issued a Properties Assessment Report No. 1020 – CPR – 090038112.

8. In case of a declaration of properties regarding a construction product which a European technical assessment has been issued for: -

9. Properties specified in the Declaration

Basic Characteristics	Property	BASIC, OPTIMA, COMFORT	BASIC DUO, OPTIMA DUO, COMFORT DUO	BASIC P-LESS, OPTIMA P-LESS, COMFORT P-LESS	EXCLUSIVE P-LESS	BASIC DUO P-LESS, OPTIMA DUO P-LESS, COMFORT DUO P-LESS	EXCLUSIVE DUO P-LESS	EXCLUSIVE UV P-LESS	EXCLUSIVE UV DUO P-LESS	Harmonized Technical Specifications
Purification efficiency degree	COD (mg/l)	92%	94%	96 % [4]	95 % [4]	97 % [4]	96 % [4]	95 % [4]	96 % [4]	EN 12566-3 + A2:2013
	BOD_5 (mg/l)	98%	99%	98 % [4]	98 % [4]	99 % [4]	98 % [4]	98 % [4]	98 % [4]	
	SS (mg/l)	96%	97%	97 % [4]	95 % [4]	98 % [4]	94 % [4]	95 % [4]	94 % [4]	
	$N\text{-}NH_4^+$ (mg/l) [11]	77%	96%	71 % [4]	73 % [4]	80 % [4]	81 % [4]	73 % [4]	81 % [4]	
	N_{total} (mg/l) 3) [12]	-	51%	64 % [4]	64 % [4]	59 % [4]	59 % [4]	64 % [4]	59 % [4]	
	P_{total} (mg/l) [13]	-	19% [12]	94 % [4]	91 % [4]	95 % [4]	90 % [4]	91 % [4]	90 % [4]	
	Enteroccod [14]	-	-	-	-	-	-	99,99 %	100 %	
	Escherichia coli [14]	-	-	-	-	-	-	99,99 %	100 %	
	Fecal coliform bacteria [14]	-	-	-	-	-	-	99,99 %	100 %	
	Coliform bacteria [14]	-	-	-	-	-	-	99,99 %	100 %	
	Somatic coliphage [14]	-	-	-	-	-	-	100 %	100 %	
Rated organic daily load	0.24 / 0.36 / 0.48 / 0.60 / 0.72 / 0.90 / 0.96 / 1.20 / 1.50 / 1.80 / 2.10 / 2.40 / 2.70 / 3.00 kg BSK_5/day [6]									
Rated daily flow	0.6 / 0.9 / 1.2 / 1.5 / 1.8 / 2.25 / 2.4 / 3.0 / 3.75 / 4.5 / 5.25 / 6.0 / 6.75 / 7.5 m^3/day [6]									
Water tightness	Passed the water test									
Holding capacity	Passed the calculation for load by hydrostatic pressure, soil (1850 kg/m^3; 36°), DRY / load by hydrostatic pressure, soil (1850 kg/m^3; 36°), DRY/ load by hydrostatic pressure, soil (1800 kg/m^3; 42°), lids (1.5 kN/m^2), DRY/ load by hydrostatic pressure, soil (1800 kg/m^3; 42°), lids (2.5 kN/m^2), DRY/ load by hydrostatic pressure, soil (1800 kg/m^3; 36°), lids (2.5 kN/m^2), DRY/ NPD / NPD / load by hydrostatic pressure, soil (1850 kg/m^3; 42°), lids (2.5 kN/m^2), DRY/load by hydrostatic pressure, soil (1850 kg/m^3; 42°), lids (2.5 kN/m^2), DRY WET 0.5 for version B [7]									
Durability	Passed the test for PP / PE / stainless steel/concrete [8]									
Fire resistance	F									
Effect of dangerous substances	NPD									

Comment: the values mentioned in "Declaration of properties", are achieved according to the EN 12566-3+A2
1) EP = equivalent person is defined pollution value 60 g BOD_5 per day and waste water value 150 l/day
2) WWTP rated polluting mater and hydraulic load must not be exceeded
3) initial load N_{total} max. 11 g/person*d
4) average value from all measured values
5) geometric mean
6) according to Identifier A for 4 / 6 / 8 / 10 / 12 / 15 / 16 / 20 / 25 / 30 / 35 / 40 / 45 / 50
7) according to Identifier A for 4 / A+C pro 6, 8, 10, 12, 16 PP / A+C+D for 4, 6, 8, 12, 15 PE with a lid / A+C+D for 4, 6, 8, 12, 15 PE with an attachment / A+B+C+D for 4, 6, 8, 12, 15 PE with an attachment / A+B+C+D for 16, 20, 25, 30, 40, 50 K PP / A+B+C+D for 16, 20, 25, 30, 40, 50 K PP N (not self-supporting) / A+C for 16, 20, 25, 30, 35 40, 45, 50 PP N (not self-supporting) / C for SL / C for B
8) according to Identifier A for 4 / C for PP / C for PE / C for SL / C for B
11) water temperature on the outlet is not under 12°C
12) T_{min} = 3,4°C; T_{max} = 19,8°C
13) with P-LESS (phosphorus precipitation)
14) with UV disinfection of purified waste water

ENVI-PUR, s.r.o.
Na Vlčovce 13/4, 160 00 Praha 6
Provozovna
Wilsonova 420, 392 01 Soběslav
Tel.: 381 203 256, fax: 381 ...
IČ: 25166077 ...

10. The product property specified in Item 1 and 2 is in accordance with the property specified in Item 9.
This Declaration of Properties is issued at the sole responsibility of the Producer specified in Item 4.

Signed for and on behalf of the Producer:

In Soběslav on 1. 4. 2020

Milan Drda
Executive and Technical Director

More than 25 YEARS on the market

ENVI-PUR, s.r.o.
Na Vlčovce 13/4
CZ-160 00 Praha 6
Czech Republic

Reg. no: 251 66 077 VAT no: CZ25166077
File number 167596C, registered in the Commercial Register at the Municipal Court in Prague

Head office & Production
Wilsonova 420
CZ-392 01 Soběslav
Czech Republic

+420 381 203 211
info@envi-pur.cz
www.envi-pur.cz